AV28WT5EPS AV24WT5EPS
AV28WT5EIS AV24WT5EIS
AV28WT5EKS AV24WT5EKS

JVC

SERVICE MANUAL

COLOUR TELEVISION

BASIC CHASSIS
JK II

AV28WT5EPS AV24WT5EPS
AV28WT5EIS AV24WT5EIS
AV28WT5EKS AV24WT5EKS

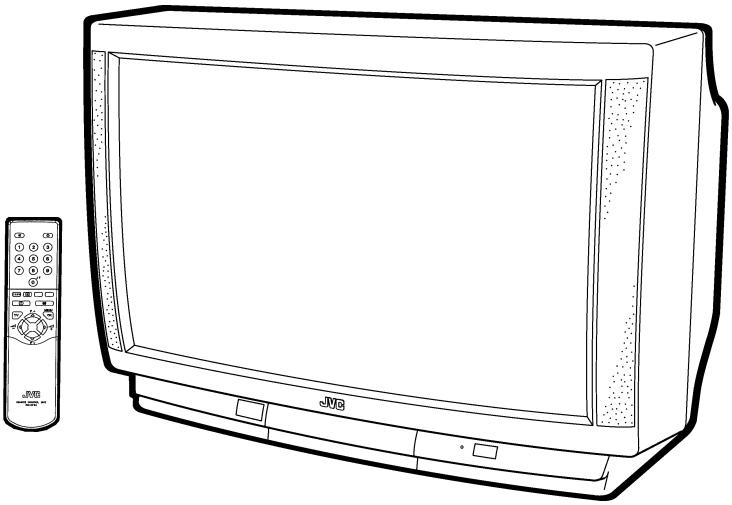

CONTENTS

■ SPECIFICATIONS ····· 2
■ SAFETY PRECAUTIONS ····· 4
■ WARNING ····· 5
■ FEATURES ····· 7
■ MAIN DIFFERENCE PARTS LIST ····· 9
■ SPECIFIC SERVICE INSTRUCTIONS ····· 10
■ SERVICE ADJUSTMENTS ····· 17
■ PARTS LIST ····· 39
★ OPERATING INSTRUCTIONS ····· 1-1
★ STANDARD CIRCUIT DIAGRAM ····· 2-1

COPYRIGHT © 2001 VICTOR COMPANY OF JAPAN, LTD.

No.51776
Jan. 2001

AV28WT5EPS
AV28WT5EIS
AV28WT5EKS

SPECIFICATIONS (28” Model)

Item	Content		
	AV28WT5EPS	**AV28WT5EIS**	**AV28WT5EKS**
Dimensions (W×H×D) **Mass**	716mm×489mm×496mm 34.2kg	← ←	← ←
TV RF System	CCIR (B/G, I ,L)	CCIR (I)	CCIR (I)
Colour System	PAL / SECAM / NTSC (Only in EXT mode)	PAL / NTSC (Only in EXT mode)	PAL / NTSC (Only in EXT mode)
Stereo System	A2 / NICAM	NICAM	NICAM
Teletext System	FLOF (Fastext) TOP (German system) WST(Standard system)	FLOF (Fastext) WST(Standard system)	←
Receiving Frequency **VHF** **UHF** **French CATV**	 47MHz ～ 470MHz 470MHz ～ 862MHz 116MHz ～ 172MHz / 220MHz ～ 469MHz	 47MHz ～ 470MHz 470MHz ～ 862MHz —	 — 470MHz ～ 862MHz —
Intermediate Frequency **VIF Carrier** **SIF Carrier**	 38.9MHz (B/G, I ,L)/ 33.95MHz (L’) 33.4MHz (5.5MHz:B/G) / 32.9MHz (6.0MHz:I) / 32.4MHz (6.5MHz:L) / 27.45MHz (6.5MHz:L’)	 38.9MHz (I) 32.9MHz (6.0MHz:I)	 38.9MHz (I) 32.9MHz (6.0MHz:I)
Colour Sub Carrier Freq. **PAL** **SECAM** **NTSC**	 4.43MHz 4.40625MHz / 4.25MHz 3.58MHz / 4.43MHz	 4.43MHz — 3.58MHz / 4.43MHz	 4.43MHz — 3.58MHz / 4.43MHz
Power Input **Power Consumption**	AC 220V～240V , 50Hz 156W(Max) / 122W(Avg),	←	←
	122W/h(ITALY)	—	—
Aerial Input Term	75Ω unbalanced, Coaxial	←	←
Picture Tube **High Voltage**	Visible size : 66cm, Measured diagonally 30.0kV $^{+1kV}_{-1.5kV}$ (at zero beam current)	←	←
Speaker **Audio Output**	10cm×3cm Oval type×2 5W + 5W	←	←
EXT-1/EXT-2/EXT-3 (Input / Output)	21-pin Euro connector (SCART socket)	←	←
EXT-4 (Input) **Video** **Audio(L/R)** **S / Video**	1Vp-p 75Ω(RCA pin jack) 500mVrms(-4dBs), High Impedance (RCA pin jack) Y : 1Vp-p POSITIVE (Negative sync Provided, when terminated with 75Ω) C : 0.286Vp-p (Burst signal, when terminated with 75Ω)	←	←
AUDIO OUT (Variable) **Headphone jack**	0～1Vrms, Low Impedance (RCA pin jack×2) Stereo mini jack (φ3.5mm)	←	←
Remote Control Unit	RM-C54 (AAA/R03 dry battery×2)	RM-C55 (AAA/R03 dry battery×2)	←

Design & specifications are subject to change without notice.

SPECIFICATIONS (24” Model)

Item	Content		
	AV24WT5EPS	**AV24WT5EIS**	**AV24WT5EKS**
Dimensions (W × H × D) **Mass**	645mm × 427mm × 443mm 23.1kg	← ←	← ←
TV RF System	CCIR (B/G, I ,L)	CCIR (I)	←
Colour System	PAL / SECAM / NTSC (Only in EXT mode)	PAL / NTSC (Only in EXT mode)	←
Stereo System	A2 / NICAM	NICAM	←
Teletext System	FLOF (Fastext) TOP (German system) WST(Standard system)	FLOF (Fastext) WST(Standard system)	←
Receiving Frequency **VHF** **UHF** **French CATV**	 47MHz ～ 470MHz 470MHz ～ 862MHz 116MHz ～ 172MHz / 220MHz ～ 469MHz	 47MHz ～ 470MHz 470MHz ～ 862MHz —	 — 470MHz ～ 862MHz —
Intermediate Frequency **VIF Carrier** **SIF Carrier**	 38.9MHz (B/G, I ,L) / 33.95MHz (L’) 33.4MHz (5.5MHz:B/G) / 32.9MHz (6.0MHz:I) /32.4MHz (6.5MHz:L) / 27.45MHz (6.5MHz:L’)	 38.9MHz (I) 32.9MHz (6.0MHz:I)	 ← ←
Colour Sub Carrier Freq. **PAL** **SECAM** **NTSC**	 4.43MHz 4.40625MHz / 4.25MHz 3.58MHz / 4.43MHz	 4.43MHz — 3.58MHz / 4.43MHz	 ← — ←
Power Input **Power Consumption**	AC 220V～240V , 50Hz 127W(Max) / 92W(Avg)	← ←	← ←
	92W/h(ITALY)	—	—
Aerial Input Term	75Ω unbalanced, Coaxial		
Picture Tube **High Voltage**	Visible size : 56cm, Measured diagonally 30.0kV $^{+1kV}_{-1.5kV}$ (at zero beam current)	← ←	← ←
Speaker **Audio Output**	10cm × 3cm Oval type × 2 5W + 5W	← ←	← ←
EXT-1/EXT-2/EXT-3 (Input / Output)	21-pin Euro connector (SCART socket)	←	←
EXT-4 (Input) **Video** **Audio(L/R)** **S / Video**	1Vp-p 75Ω (RCA pin jack) 500mVrms(-4dBs), High Impedance (RCA pin jack) Y : 1Vp-p POSITIVE (Negative sync Provided, when terminated with 75Ω) C : 0.286Vp-p (Burst signal, when terminated with 75Ω)	←	←
AUDIO OUT **Headphone jack**	0～1Vrms, Low Impedance (RCA pin jack) Stereo mini jack (φ 3.5mm)	← ←	← ←
Remote Control Unit	RM-C54 (AAA/R03 dry battery × 2)	RM-C55 (AAA/R03 dry battery × 2)	←

Design & specifications are subject to change without notice

SAFETY PRECAUTIONS

AV28WT5EPS / AV24WT5EPS

1. The design of this product contains special hardware, many circuits and components specially for safety purposes. For continued protection, no changes should be made to the original design unless authorized in writing by the manufacturer. Replacement parts must be identical to those used in the original circuits. Service should be performed by qualified personnel only.

2. Alterations of the design or circuitry of the products should not be made. Any design alterations or additions will void the manufacturer's warranty and will further relieve the manufacturer of responsibility for personal injury or property damage resulting therefrom.

3. Many electrical and mechanical parts in the products have special safety-related characteristics. These characteristics are often not evident from visual inspection nor can the protection afforded by them necessarily be obtained by using replacement components rated for higher voltage, wattage, etc. Replacement parts which have these special safety characteristics are identified in the parts list of Service manual. **Electrical components having such features are identified by shading on the schematics and by (⚠) on the parts list in Service manual.** The use of a substitute replacement which does not have the same safety characteristics as the recommended replacement part shown in the parts list of Service manual may cause shock, fire, or other hazards.

4. **Don't short between the LIVE side ground and ISOLATED (NEUTRAL) side ground or EARTH side ground when repairing.**
   Some model's power circuit is partly different in the GND. The difference of the GND is shown by the LIVE : (⊥) side GND, the ISOLATED(NEUTRAL) : (⏚) side GND and EARTH : (⏚) side GND. Don't short between the LIVE side GND and ISOLATED(NEUTRAL) side GND or EARTH side GND and never measure with a measuring apparatus (oscilloscope etc.) the LIVE side GND and ISOLATED(NEUTRAL) side GND or EARTH side GND at the same time.
   If above note will not be kept, a fuse or any parts will be broken.

5. If any repair has been made to the chassis, it is recommended that the B1 setting should be checked or adjusted (See ADJUSTMENT OF B1 POWER SUPPLY).

6. The high voltage applied to the picture tube must conform with that specified in Service manual. Excessive high voltage can cause an increase in X-Ray emission, arcing and possible component damage, therefore operation under excessive high voltage conditions should be kept to a minimum, or should be prevented. If severe arcing occurs, remove the AC power immediately and determine the cause by visual inspection (incorrect installation, cracked or melted high voltage harness, poor soldering, etc.). To maintain the proper minimum level of soft X-Ray emission, components in the high voltage circuitry including the picture tube must be the exact replacements or alternatives approved by the manufacturer of the complete product.

7. Do not check high voltage by drawing an arc. Use a high voltage meter or a high voltage probe with a VTVM. Discharge the picture tube before attempting meter connection, by connecting a clip lead to the ground frame and connecting the other end of the lead through a 10kΩ 2W resistor to the anode button.

8. When service is required, observe the original lead dress. Extra precaution should be given to assure correct lead dress in the high voltage circuit area. Where a short circuit has occurred, those components that indicate evidence of overheating should be replaced. Always use the manufacturer's replacement components.

9. **Isolation Check**
   (Safety for Electrical Shock Hazard)
   After re-assembling the product, always perform an isolation check on the exposed metal parts of the cabinet (antenna terminals, video/audio input and output terminals, Control knobs, metal cabinet, screwheads, earphone jack, control shafts, etc.) to be sure the product is safe to operate without danger of electrical shock.

(1) **Dielectric Strength Test**
The isolation between the AC primary circuit and all metal parts exposed to the user, particularly any exposed metal part having a return path to the chassis should withstand a voltage of 3000V AC (r.m.s.) for a period of one second.
(. . . . Withstand a voltage of 1100V AC (r.m.s.) to an appliance rated up to 120V, and 3000V AC (r.m.s.) to an appliance rated 200V or more, for a period of one second.)
This method of test requires a test equipment not generally found in the service trade.

(2) **Leakage Current Check**
Plug the AC line cord directly into the AC outlet (do not use a line isolation transformer during this check.). Using a "Leakage Current Tester", measure the leakage current from each exposed metal part of the cabinet, particularly any exposed metal part having a return path to the chassis, to a known good earth ground (water pipe, etc.). Any leakage current must not exceed 0.5mA AC (r.m.s.).
However, in tropical area, this must not exceed 0.2mA AC (r.m.s.).

● **Alternate Check Method**
Plug the AC line cord directly into the AC outlet (do not use a line isolation transformer during this check.). Use an AC voltmeter having 1000 ohms per volt or more sensitivity in the following manner. Connect a 1500Ω 10W resistor paralleled by a 0.15μF AC-type capacitor between an exposed metal part and a known good earth ground (water pipe, etc.). Measure the AC voltage across the resistor with the AC voltmeter. Move the resistor connection to each exposed metal part, particularly any exposed metal part having a return path to the chassis, and measure the AC voltage across the resistor. Now, reverse the plug in the AC outlet and repeat each measurement. Any voltage measured must not exceed 0.75V AC (r.m.s.). This corresponds to 0.5mA AC (r.m.s.).
However, in tropical area, this must not exceed 0.3V AC (r.m.s.). This corresponds to 0.2mA AC (r.m.s.).

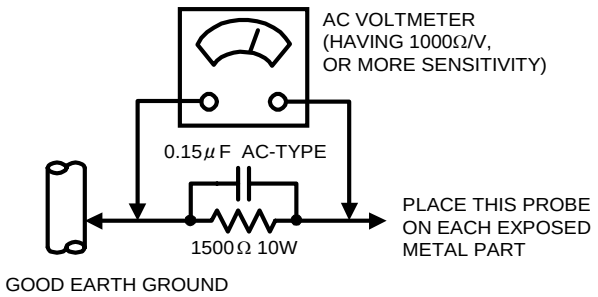

SAFETY PRECAUTIONS

AV28WT5EIS / AV24WT5EIS
AV28WT5EKS / AV24WT5EKS

1. The design of this product contains special hardware and many circuits and components specially for safety purposes. For continued protection, no changes should be made to the original design unless authorized in writing by the manufacturer. Replacement parts must be identical to those used in the original circuits. Service should be performed by qualified personnel only.

2. Alterations of the design or circuitry of the product should not be made. Any design alterations or additions will void the manufacturer's warranty and will further relieve the manufacturer of responsibility for personal injury or property damage resulting therefrom.

3. Many electrical and mechanical parts in the product have special safety-related characteristics. These characteristics are often not evident from visual inspection nor can the protection afforded by them necessary be obtained by using replacement components rated for higher voltage, wattage, etc. Replacement parts which have these special safety characteristics are identified in the Parts List of Service Manual. Electrical components having such features are identified by shading on the schematics and by (⚠) on the Parts List in the Service Manual. The use of a substitute replacement which does not have the same safety characteristics as the recommended replacement part shown in the Parts List of Service Manual may cause shock, fire, or other hazards.

4. The leads in the products are routed and dressed with ties, clamps, tubing's, barriers and the like to be separated from live parts, high temperature parts, moving parts and / or sharp edges for the prevention of electric shock and fire hazard. When service is required, the original lead routing and dress should be observed, and it should be confirmed that they have been returned to normal, after re-assembling.

WARNING

1. The equipment has been designed and manufactured to meet international safety standards.
2. It is the legal responsibility of the repairer to ensure that these safety standards are maintained.
3. Repairs must be made in accordance with the relevant safety standards.
4. It is essential that safety critical components are replaced by approved parts.
5. If mains voltage selector is provided, check setting for local voltage.

■21-pin Euro connector (SCART socket) : EXT-1 / EXT-2 / EXT-3

(P-P= Peak to Peak, S-W= Sync tip to white peak, B-W= Blanking to white peak)

Pin No.	Signal Designation	Matching Value	EXT-1	EXT-2	EXT-3
1	AUDIO R output	500mVrms(Nominal), Low impedance	○ (TV OUT)	○ (LINE OUT)	NC
2	AUDIO R input	500mVrms(Nominal), High impedance	○	○	○
3	AUDIO L output	500mVrms(Nominal), Low impedance	○ (TV OUT)	○ (LINE OUT)	NC
4	AUDIO GND		○	○	○
5	GND (B)		○	○	○
6	AUDIO L input	500mVrms(Nominal), High impedance	○	○	○
7	B input	$700mV_{B-W}$, 75Ω	○	NC	NC
8	FUNCTON SW (SLOW SW)	Low : 0-3V, High : 8-12V, High impedance	○	○	○
9	GND (G)		○	○	○
10	SCL3		NC	○	NC
11	G input	$700mV_{B-W}$, 75Ω	○	NC	NC
12	SDA3		NC	○	NC
13	GND (R)		○	○	○
14	GND (Y_S)		○	NC	NC
15	R / C input	R : $700mV_{B-W}$, 75Ω C : $300mV_{P-P}$, 75Ω	○ (only R)	○ (only C)	○ (only C)
16	Ys input	Low : 0 - 0.4, High : 1 - 3V, 75Ω	○	NC	NC
17	GND(VIDEO output)		○	○	○
18	GND(VIDEO input)		○	○	○
19	VIDEO output	$1V_{P-P}$(Negative going sync), 75Ω	○ (TV)	○ (LINE OUT)	NC
20	VIDEO / Y input	$1V_{P-P}$(Negative going sync), 75Ω	○	○	○
21	COMMON GND		○	○	○

[Pin assignment]

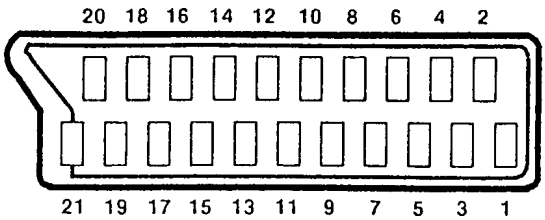

FEATURES

- By preference, users can select the picture size from REGULAR, PANORAMIC, FULL, 14:9 ZOOM, 16:9 ZOOM, 16:9 ZOOM SUB TITLE modes. When the TV unit received WSS picture signal, the picture can be changed to 16:9 ZOOM mode automatically.
- The TELETEXT SYSTEM has a built-in FASTEXT, TOP(Only AV28WT5EPS / AV24WT5EPS) and WST system.
- Because this TV unit corresponds to multiplex broadcast, users can enjoy music programs and sporting events with live realism. In addition, BILINGUAL programs can be heard in their original language.
- Built-in ECO (ECONOMY, ECOLOGY) MODE.
  In accordance with the brightness in a room, the brightness and/or contrast of the picture can be adjusted automatically to make the optimum picture which is easy on the eye.
- Users can make VCR dubbing of picture and sound by controlling the AV selector to select an optional source at the EXT-2 output shown in figure.

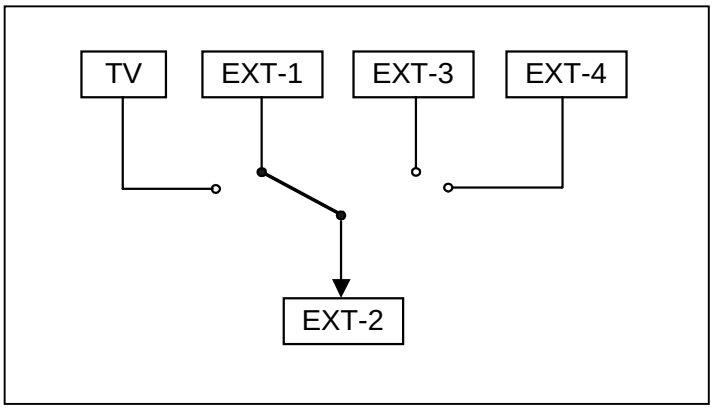

AV28WT5EPS AV24WT5EPS
AV28WT5EIS AV24WT5EIS
AV28WT5EKS AV24WT5EKS

MAIN DIFFERENCE PARTS LIST

(28” Model)

⚠	Model Name / Part Name	AV28WT5EPS	AV28WT5EIS	AV28WT5EKS
	MAIN PWB	SJK-1712A-U2	←	SJK-1912A-U2
	AV SEL. PWB	SJK0S712A-U2	←	SJK0S912A-U2
⚠	POWER CORD	QMPK160-185-JC	QMPN130-185-JC	←
⚠	RATING LABEL	LC20433-008A-U LC20434-008A-U	LC20080-015A-U	LC20091-023A-U
	EURO LABEL	AEM1052-031-E	AEM1052-030-E	AEM1052-029-E
⚠	INST BOOK	LCT0897-001A-U LCT0898-001A-U	LCT0900-001A-U	LCT0899-001A-U
	REMOTE CONTROL UNIT	RM-C54-1C	RM-C55-1C	←
	X-RAY CARD	AEM1061-001-E	×	×
	S. DIAGRAM ONLY ITALY(SERVICE)	2824WT5-HSAEI	×	×
	REG. SHEET	×	×	AEM3148-001-E

(24” Model)

⚠	Model Name / Part Name	AV24WT5EPS	AV24WT5EIS	AV24WT5EKS
	MAIN PWB	SJK-1713A-U2	←	SJK-1913A-U2
	AV SEL. PWB	SJK0S713A-U2	←	SJK0S913A-U2
⚠	POWER CORD	QMPK160-185-JC	QMPN130-185-JC	←
⚠	RATING LABEL	LC20433-007A-U LC20434-007A-U	LC20080-014A-U	LC20091-022A-U
	EURO LABEL	AEM1052-027-E	AEM1052-025-E	AEM1052-026-E
⚠	INST BOOK	LCT0897-001A-U LCT0898-001A-U	LCT0900-001A-U	LCT0899-001A-U
	REMOTE CONTROL UNIT	RM-C54-1C	RM-C55-1C	←
	X-RAY CARD	AEM1060-001-E	×	×
	S. DIAGRAM ONLY ITALY(SERVICE)	2824WT5-HSAEI	×	×
	REG. SHEET	×	×	AEM3148-001-E

SPECIFIC SERVICE INSTRUCTIONS

REPLACEMENT OF CHIP COMPONENT

■ CAUTIONS

1. Avoid heating for more than 3 seconds.
2. Do not rub the electrodes and the resist parts of the pattern.
3. When removing a chip part, melt the solder adequately.
4. Do not reuse a chip part after removing it.

■ SOLDERING IRON

1. Use a high insulation soldering iron with a thin pointed end of it.
2. A 30w soldering iron is recommended for easily removing parts.

■ REPLACEMENT STEPS

1. How to remove Chip parts

◆ **Resistors, capacitors, etc**

(1) As shown in the figure, push the part with tweezers and alternately melt the solder at each end.

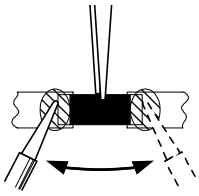

(2) Shift with tweezers and remove the chip part.

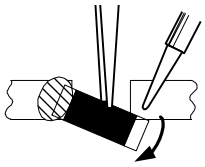

◆ **Transistors, diodes, variable resistors, etc**

(1) Apply extra solder to each lead.

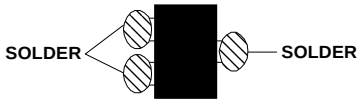

(2) As shown in the figure, push the part with tweezers and alternately melt the solder at each lead. Shift and remove the chip part.

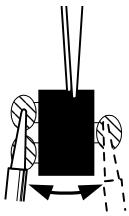

Note : After removing the part, remove remaining solder from the pattern.

2. How to install Chip parts

◆ **Resistors, capacitors, etc**

(1) Apply solder to the pattern as indicated in the figure.

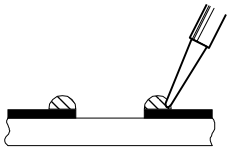

(2) Grasp the chip part with tweezers and place it on the solder. Then heat and melt the solder at both ends of the chip part.

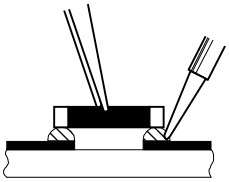

◆ **Transistors, diodes, variable resistors, etc**

(1) Apply solder to the pattern as indicated in the figure.

(2) Grasp the chip part with tweezers and place it on the solder.

(3) First solder lead **A** as indicated in the figure.

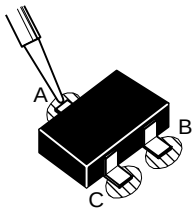

(4) Then solder leads **B** and **C**.

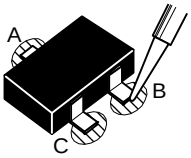

DISASSEMBLY PROCEDURE (28” Model)

REMOVING THE REAR COVER

1. Unplug the power cord.
2. Remove the 13 screws marked “Ⓐ” as shown in the Fig. 1.
3. Withdraw the rear cover toward you.

REMOVING THE CHASSIS

- After removing the rear cover.

1. Remove the screw marked “Ⓑ” on the S/VIDEO terminal of FRONT CABINET as shown in the Fig. 1.
2. Slightly raise the both sides of the chassis by hand and remove the two claws under the both sides of the chassis from the front cabinet.
3. Withdraw the chassis backward.
   (If necessary, take off the wire clamp, connectors etc.)

REMOVING THE AV TERMINAL BOARD

- After removing the rear cover.

1. Remove the 2 screws marked “Ⓒ” as shown in the Fig. 1.
2. Remove the claws marked “Ⓓ” under the CHASSIS as shown in Fig. 2.
3. While raising the claw marked “Ⓔ”, remove the top of the AV TERMINAL BOARD slightly in the direction of arrow “Ⓕ” as shown in Fig. 2.

REMOVING THE SPEAKER

- After removing the rear cover.

1. Remove the 2 screws marked “Ⓖ” as shown in Fig. 1.
2. Follow the same steps when removing the other hand speaker.

CHECKING THE PW BOARD

To check the back side of the PW Board.

1) Pull out the chassis. (Refer to REMOVING THE CHASSIS).
2) Erect the chassis vertically so that you can easily check the back side of the PW Board.

[CAUTION]

- When erecting the chassis, be careful so that there will be no contacting with other PW Board.
- Before turning on power, make sure that the wire connector is properly connected.
- When conducting a check with power supplied, be sure to confirm that the CRT EARTH WIRE (BRAIDED ASS’Y) is connected to the CRT SOCKET PW board.

WIRE CLAMPING AND CABLE TYING

1. Be sure to clamp the wire.
2. Never remove the cable tie used for tying the wires together.
   Should it be inadvertently removed, be sure to tie the wires with a new cable tie.

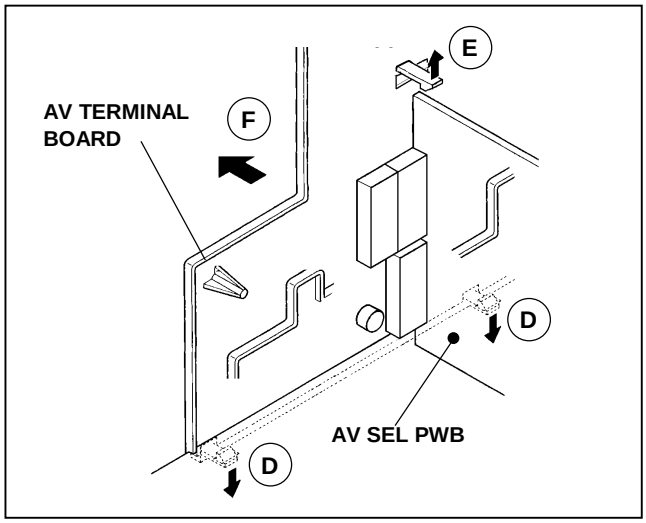

Fig. 2

(28” Model)

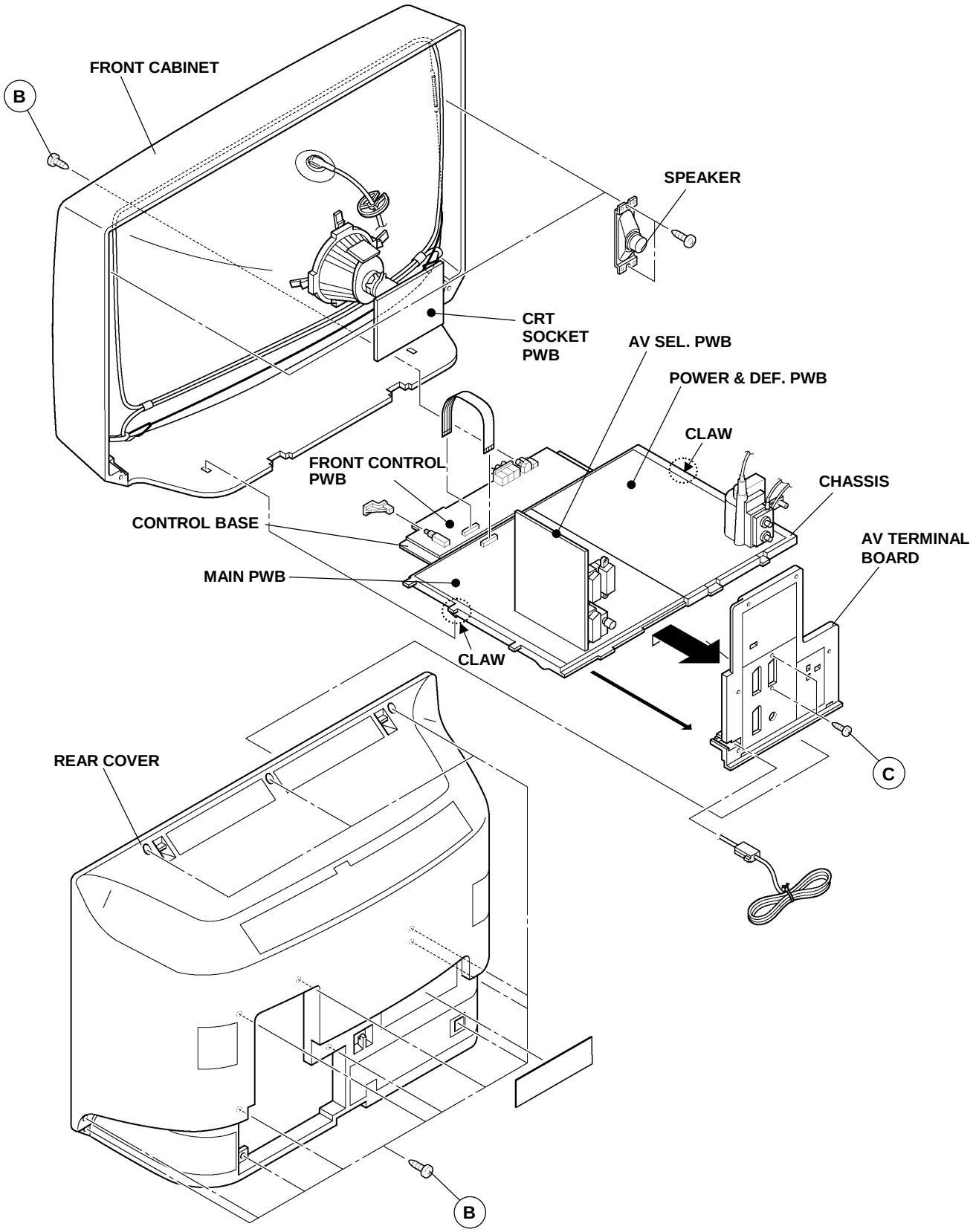

Fig. 1

DISASSEMBLY PROCEDURE (24” Model)

REMOVING THE REAR COVER

1. Unplug the power cord.
2. Remove the 9 screws marked “Ⓐ” as shown in the Fig. 3.
3. Withdraw the rear cover toward you.

REMOVING THE CHASSIS

- After removing the rear cover.

1. Slightly raise the both sides of the chassis by hand and remove the two claws under the both sides of the chassis from the front cabinet.
2. Withdraw the chassis backward.
   (If necessary, take off the wire clamp, connectors etc.)

REMOVING THE AV TERMINAL BOARD

- After removing the rear cover.

1. Remove the 2 screws marked “Ⓑ” as shown in the Fig. 3.
2. Remove the claws marked “Ⓒ” under the CHASSIS as shown in Fig. 4.
3. While raising the claw marked “Ⓓ”, remove the top of the AV TERMINAL BOARD slightly in the direction of arrow “Ⓔ” as shown in Fig. 4.

REMOVING THE SPEAKER

- After removing the rear cover.

1. Remove the 2 screws marked “Ⓕ” as shown in Fig. 3.
2. Follow the same steps when removing the other hand speaker.

CHECKING THE PW BOARD

- To check the back side of the PW Board.
  1) Pull out the chassis. (Refer to REMOVING THE CHASSIS).
  2) Erect the chassis vertically so that you can easily check the back side of the PW Board.

[CAUTION]

- When erecting the chassis, be careful so that there will be no contacting with other PW Board.
- Before turning on power, make sure that the wire connector is properly connected.
- When conducting a check with power supplied, be sure to confirm that the CRT EARTH WIRE (BRAIDED ASS’Y) is connected to the CRT SOCKET PW board.

WIRE CLAMPING AND CABLE TYING

1. Be sure to clamp the wire.
2. Never remove the cable tie used for tying the wires together. Should it be inadvertently removed, be sure to tie the wires with a new cable tie.

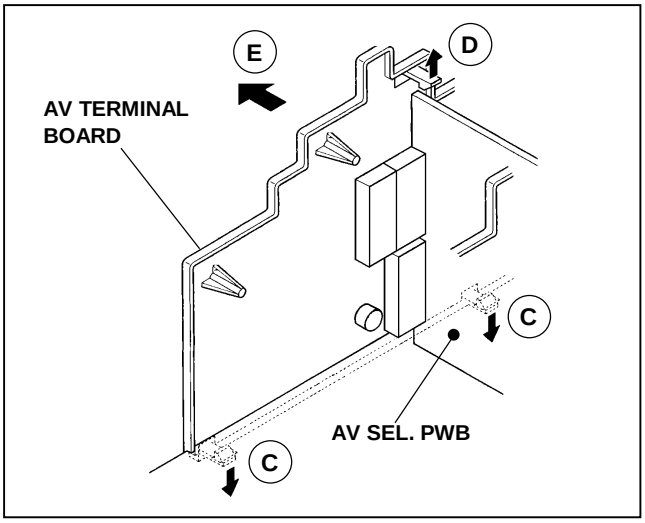

Fig. 4

(24” Model)

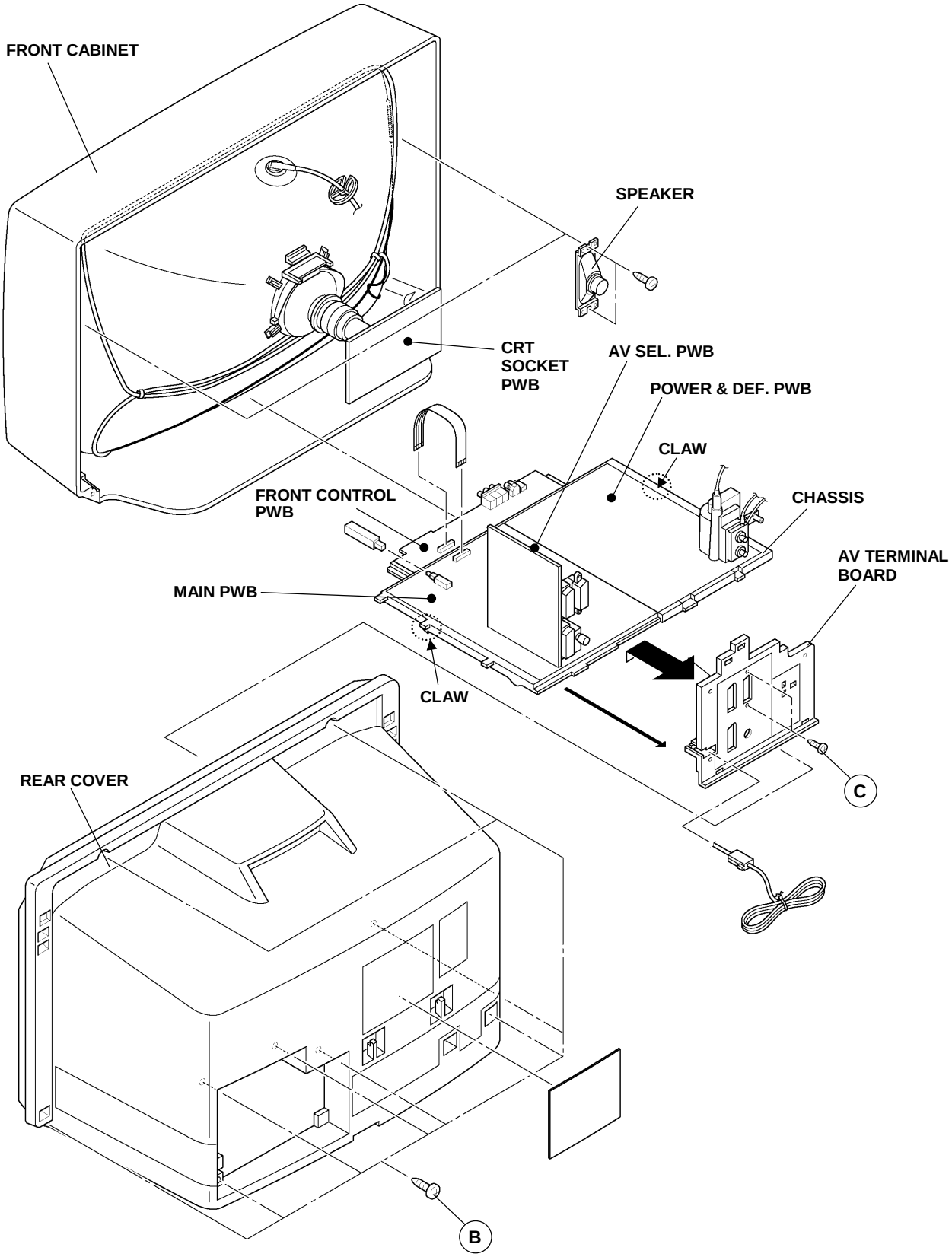

Fig. 3

REMOVING THE CRT

∗ Replacement of the CRT should be performed by 2 or more persons.

- After removing the cover, chassis etc.,

1. Putting the CRT change table on soft cloth, the CRT change table should also be covered with such soft cloth (shown in Fig.5).
2. While keeping the surface of CRT down, mount the TV set on the CRT change table balanced will as shown in Fig.6.
3. Remove 4 screws marked by arrows with a box type screw driver as shown in Fig.6.

- Since the cabinet will drop when screws have been removed, be sure to support the cabinet with hands.

4. After 4 screws have been removed, put the cabinet slowly on cloth (At this time, be carefully so as not to damage the front surface of the cabinet) shown in Fig.7.

- The CRT should be assembled according to the opposite sequence of its dismounting steps.

∗ The CRT change table should preferably be smaller that the CRT surface, and its height be about 35cm.

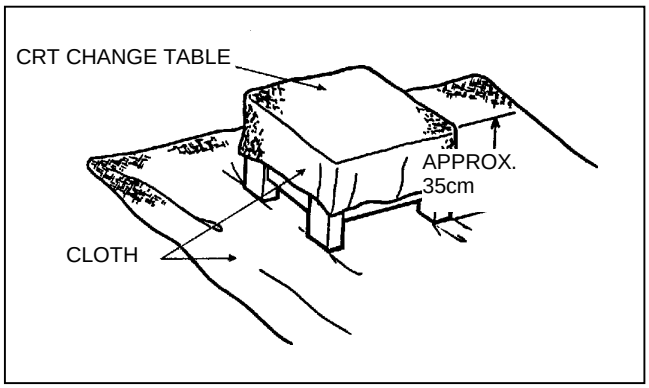

Fig. 5

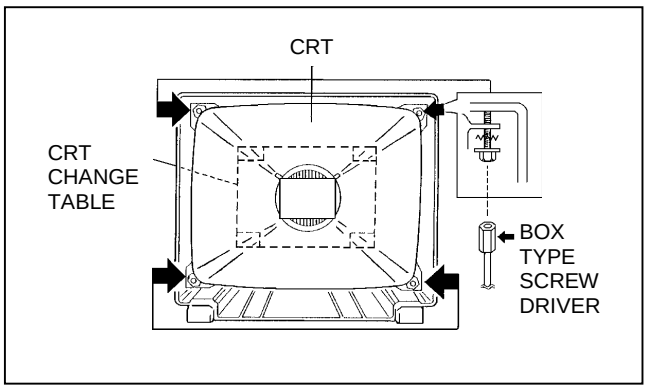

Fig. 6

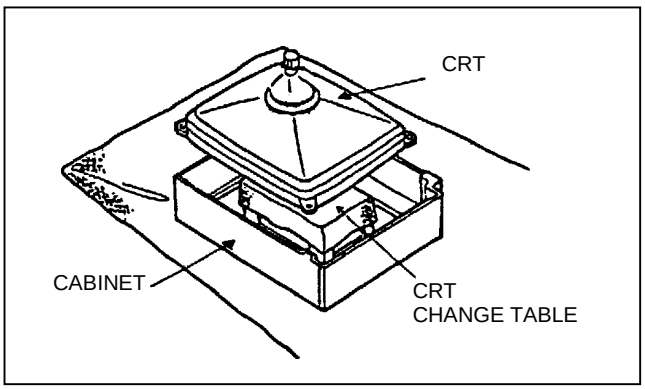

Fig. 7

COATING OF SILICON GREASE FOR ELECTRICAL INSULATION ON THE CRT ANODE CAP SECTION.

- Subsequent to replacement of the CRT and HV transformer or repair of the anode cap, etc. by dismounting them, be sure to coat silicon grease for electrical insulation as shown in Fig.8.

  Wipe around the anode button with clean and dry cloth. (Fig.8)
  Coat silicon grease on the section around the anode button. At this time, take care so that any silicon greases dose not stick to the anode button. (Fig.9)

★ **Silicon grease product No. KS - 650N**

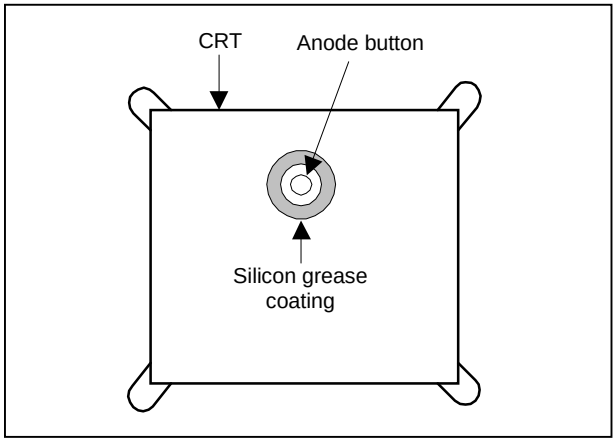

Fig. 8

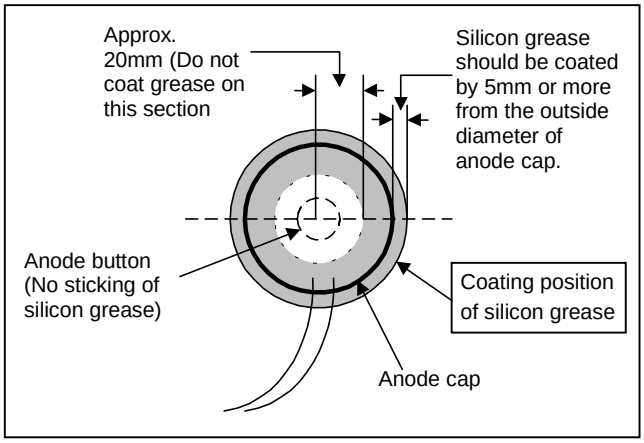

Fig. 9

REPLACEMENT OF MEMORY ICs

1. Memory ICs

This TV use memory ICs. In the memory ICs, there are memorized data for correctly operating the video and deflection circuits. When replacing memory ICs, be sure to use ICs written with the initial values of data.

2. Procedure for replacing memory ICs

PROCEDURE
(1) **Power off** Switch the power off and unplug the power cord from the outlet.
(2) **Replace ICs**. Be sure to use memory ICs written with the initial data values.
(3) **Power on** Plug the power cord into the outlet and switch the power on.
(4) **Check and set SYSTEM CONSTANT SET:** ✱ It must not adjust without signal. 1) Press the INFORMATION key and the MUTING key of the REMOTE CONTROL UNIT simultaneously. 2) The SERVICE MENU screen of Fig. 1 will be displayed. 3) While the SERVICE MENU is displayed, press the INFORMATION key and MUTING key simultaneously, and the SYSTEM CONSTANT SET screen of Fig. 2 will be displayed. 4) Check the setting values of the SYSTEM CONSTANT SET of Table 1. If the value is different, select the setting item with the FUNCTION UP/DOWN key, and set the correct value with the FUNCTION -/+ key. 5) Press the MENU key to memorize the setting value. 6) Press the INFORMATION key twice, and return to the normal screen.
(5) **Setting of receive channels** Set the receive channel. For setting, refer to the OPERATING INSTRUCTIONS.
(6) **User settings** Check the user setting values of Table 2, and if setting value is different, set the correct value. For setting, refer to the OPERATING INSTRUCTIONS.
(7) **Setting of SERVICE MENU** Verify the setting items of the **SERVICE MENU** of Table 3, and reset where necessary. For setting, refer to the SERVICE ADJUSTMENTS.

SERVICE MENU

1. IF 2. V/C
3. AUDIO 4. DEF
5. VSM PRESET 6. VPS
7. AUTO PROGRAM (OFF)

1-7 : SELECT ⓘ : EXIT

Fig.1

SYSTEM CONSTANT SET

MODEL=JK_EURO (V*. ****)

COUNTRY : **
INCH : **
MODEL : WT

- + OK : STORE ⓘ : EXIT

JVC JK-II EURO V00

******** – *****

Fig.2

NAME OF REMOTE CONTROL KEY

Names of key	key
INFORMATION	ⓘ
MUTING	
MENU	OK
FUNCTION UP/DOWN	▲ ▼
FUNCTION -/+	◀ ▶

AV28WT5EPS AV24WT5EPS
AV28WT5EIS AV24WT5EIS
AV28WT5EKS AV24WT5EKS

SETTING VALUES OF SYSTEM CONSTANT SET (TABLE 1)

Setting item	Setting content	Setting value		
		AV28WT5EPS	AV28WT5EIS	AV28WT5EKS
		AV24WT5EPS	AV24WT5EIS	AV24WT5EKS
COUNTRY	→ EK → EN → EP → IR → EE →	EP	IR	EK
INCH	→ 24 → 28 → 32 →	28	28	28
		24	24	24
MODEL	→ WT → WR →	WT	←	←

USER SETTING VALUES (TABLE 2)

PICTURE SETTING		EXT SETTING	
TINT CONTRAST BRIGHT SHARP COLOUR ECO MODE	COOL REFER to VSM PRESET OFF	ID S-IN DUBBING	BLANK BLANK EXT-1→EXT-2
PICTURE FEATURES		FEATURES	
AUTO VNR COLOUR SYSTEM 4:3 AUTO ASPECT	AUTO TV : According to preset CH EXT : AUTO PANORAMIC	SLEEP TIMER BLUE BACK CHILD LOCK DECODER (EXT-2)	OFF ON ID : No.**** ALL CH OFF OFF
SOUND SETTING		INSTALL	
STEREO / Ⅰ・Ⅱ BASS TREBLE BALANCE HYPER SOUND	○ +3 CENTER OFF	LANGUAGE EDIT/MANUAL	ENGLISH PRESET CH only The others : BLANK
		DEMO	OFF

SERVICE MENU SETING ITEMS (TABLE 3)

Setting item	Setting value	Setting item	Setting value
1. IF	VCO	4. DEF.	1. V-SHIFT 2. V-SIZE 3. SUBTITLE 4. H-CENT 5. H-SIZE 6. EW-PIN 7. TRAPEZ 8. EW. COR. L 9. EW. COR. H 10. V. S-COR 11. V- LIN 12. H-BLK-R 13. H-BLK-L 14. V-EHT 15. H-EHT 16. EHT-GAIN
2. V / C	1. CUT OFF 2. DRIVE 3. BRIGHT 4. CONT. 5. COLOUR 6. HUE 7. BLACK OFFSET (Only SECAM) 8. SHARP 9. PURITY	5. VSM PRESET COOL NORMAL WARM	1. BRIGHT 2. CONT. 3. COLOUR 4. SHARP 5. HUE 6. R DRIVE 7. B DRIVE
1. AUDIO **(Do not adjust)**	1. CONC LIMIT 2. A2 ID THR 3. ALC 4. BASS 5. TREBLE	6. VPS **(Do not adjust)**	VPS PDC
		7. AUTO PROGRAM **(Do not adjust)**	ON / OFF

SERVICE ADJUSTMENTS

BEFORE STARTING SERVICE ADJUSTMENT

1. **There are 2 ways of adjusting this TV: One is with the REMOTE CONTROL UNIT and the other is the conventional method using adjustment parts and components.**
2. **The setting (adjustment) using the REMOTE CONTROL UNIT is made on the basis of the initial setting values. The setting values which adjust the screen to the optimum condition can be different from the initial setting values.**
3. Make sure that connection is correctly made to AC power source.
4. Turn on the power of the TV and measuring instrument for warming up for at least 30 minutes before starting adjustment.
5. If the receive or input signal is not specified, use the most appropriate signal for adjustment.
6. Never touch parts (such as variable resistors, transformers and condensers) not shown in the adjustment items of this service adjustment.
7. Preparation for adjustment (presetting):
   Unless otherwise specified in the adjustment items, preset the following functions with the REMOTE CONTROL UNIT:

- Setting position

PICTURE MODE (VSM)	NORMAL
SLEEP TIMER	OFF
BALANCE	CENTER
ECO	OFF
ZOOM	PANORAMIC

MEASURING INSTRUMENT AND FIXTURES

1. DC voltmeter (or digital voltmeter)
2. Oscilloscope
3. Signal generator (Pattern generator) [PAL / SECAM / NTSC]
4. Remote control unit

ADJUSTMENT ITEMS

- B1 power supply check.
- Adjustment of FOCUS.
- IF circuit adjustment.
- VSM preset adjust setting.
- VIDEO / CHROMA circuit adjustment.
- DEFLECTION circuit adjustment.
- H. BLANKING ADJUSTMENT.
- AUDIO circuit adjustment. (Do not adjust)

ADJUSTMENT LOCATIONS (1)

(28” Model)

FRONT

FRONT CONTROL PWB (1)
(AV28WT5EPS/EIS/EKS)

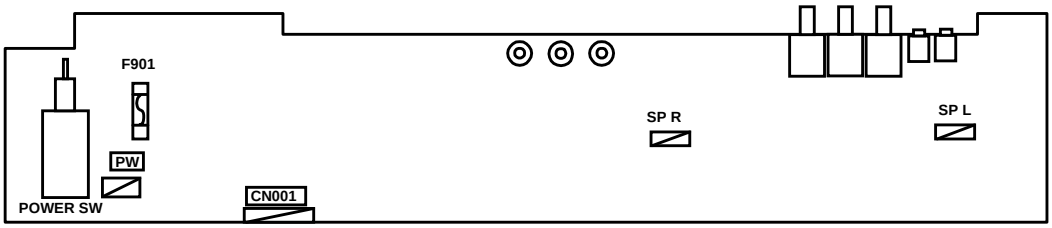

FRONT

MAIN PWB

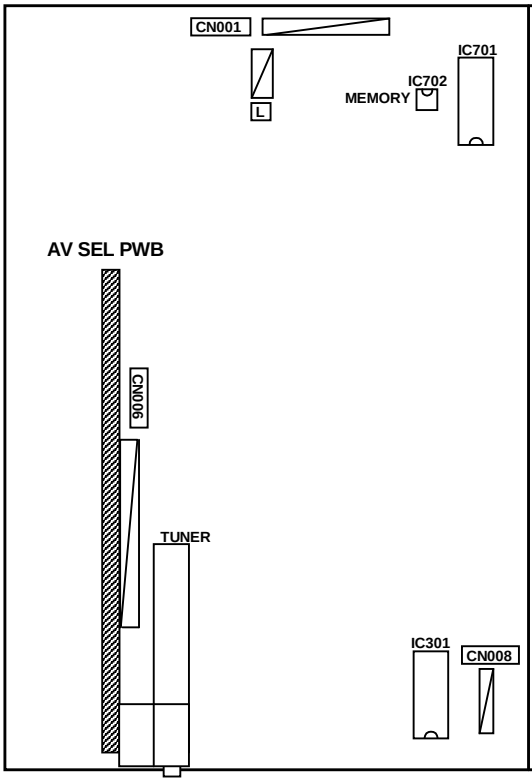

FRONT

POWER&DEF PWB

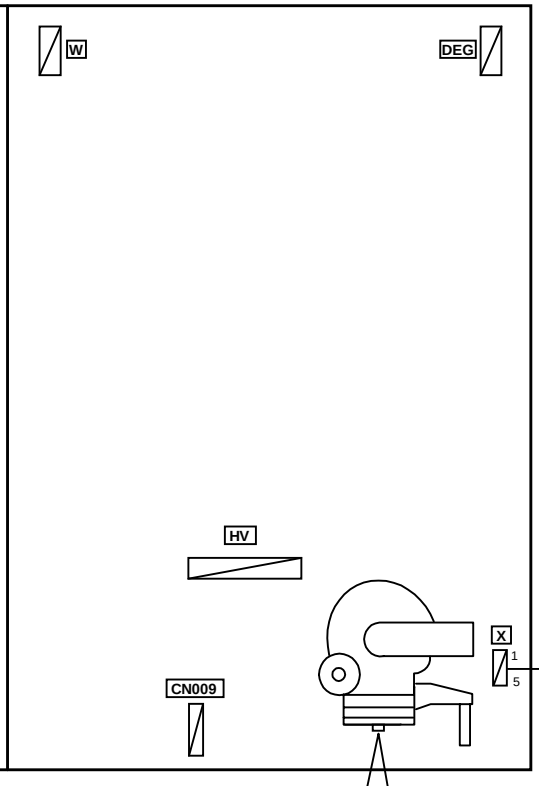

TOP

CRT SOCKET PWB (SOLDER SIDE)

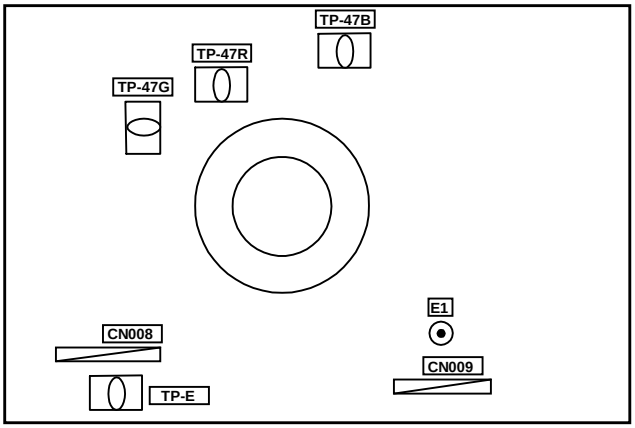

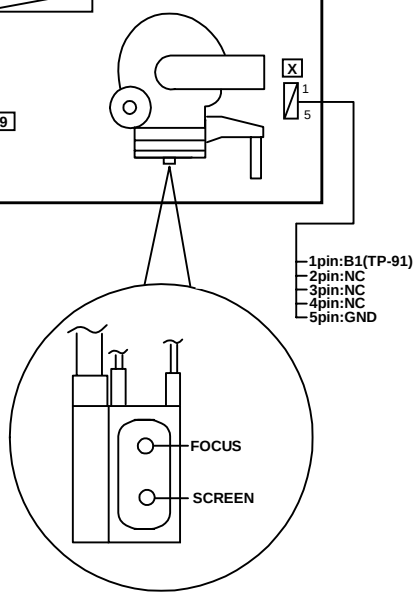

ADJUSTMENT LOCATIONS (2)

(24” Model)

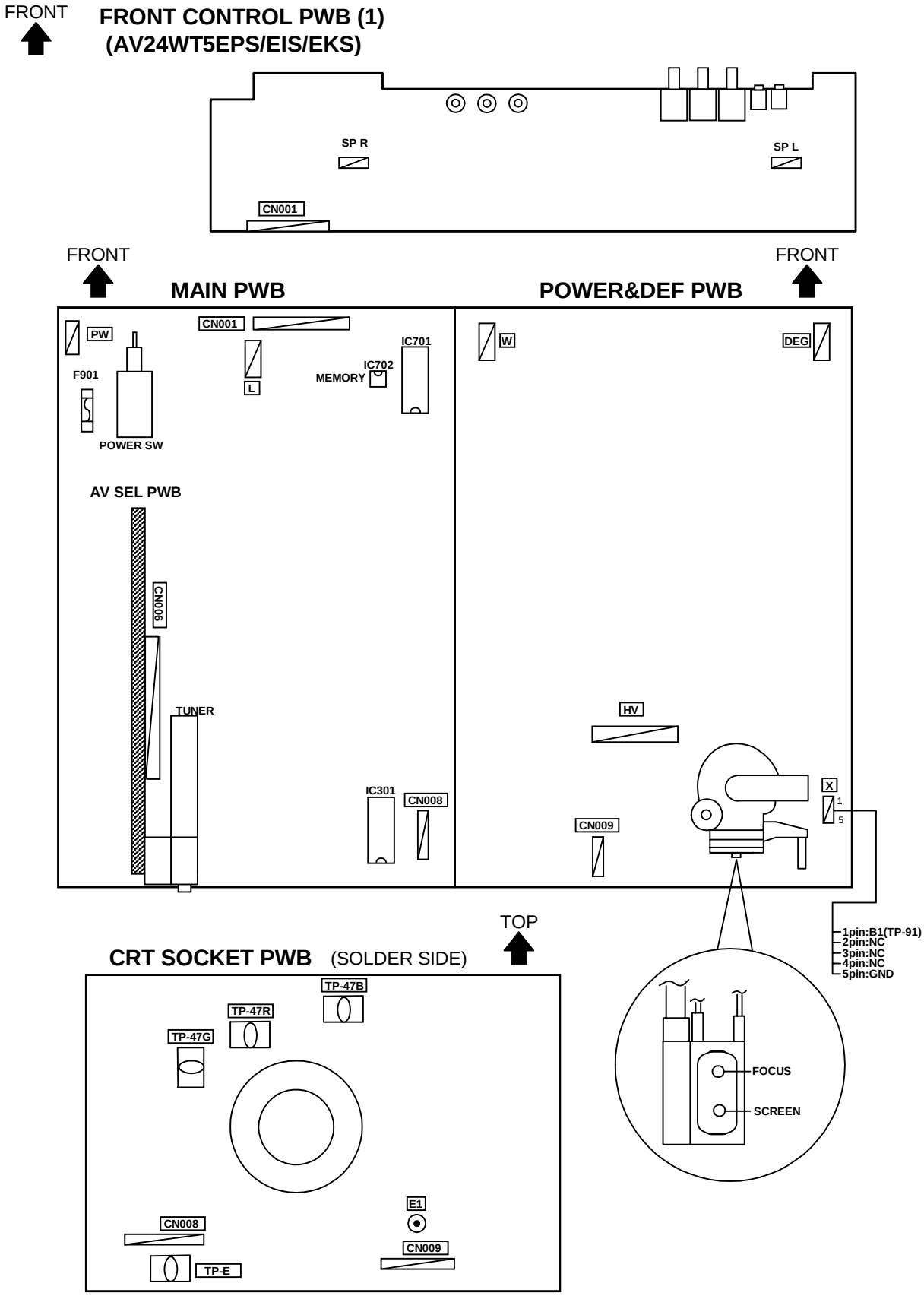

BASIC OPERATION SERVICE MENU

1. TOOL OF SERVICE MENU OPERATION

Operate the SERVICE MENU with the REMOTE CONTROL UNIT.

2. SERVICE MENU ITEMS

With the SERVICE MENU, various settings (adjustments) can be made, and they are broadly classified in the following items of settings (adjustments):

(1) **1. IF** ····· This mode adjusts the setting values of the IF circuit.

(2) **2.V/C** ····· This mode adjusts the setting values of the VIDEO / CHROMA circuit.

(3) **3.AUDIO** ····· This mode adjusts the setting values of the multiplicity SOUND circuit.

(4) **4.DEF** ····· This mode adjusts the setting values of the DEFLECTION circuit for each aspect mode given below.

REGULAR	(50/60Hz)
PANORAMIC	(50/60Hz)
14:9 ZOOM	(50/60Hz)
16:9 ZOOM	(50/60Hz)
SUB TITLE	(50/60Hz)
FULL	(50/60Hz)

(5) **5.VSM PRESET** ····· This mode adjusts the initial setting values of COOL,NOMAL and WARM.
(VSM : Video Status Memory)

(6) **6.VPS** ····· This mode shows the monitor of the VPS and PDC.***(Do not adjust)***.
(VPS : Video Program System, PDC : Program Delivery Code)

(7) **7.AUTO PROGRAM** ····· By turning the power switch on, you can get the state of AUTO PROGRAM. ***(Do not adjust)***

3. BASIC OPERATION OF SERVICE MENU

(1) **How to enter SERVICE MENU**

Press the INFORMATION key and the MUTING key of the REMOTE CONTROL UNIT simultaneously, and the SERVICE MENU screen of Fig. 1 will be displayed.

SERVICE MENU

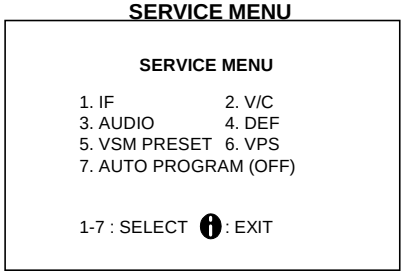

Fig.1

(2) **Selection of SUB MENU SCREEN**

Press one of keys 1～7 of the REMOTE CONTROL UNIT and select the SUB MENU SCREEN (See Fig. 3), form the SERVICE MENU.

SERVICE MENU → SUB MENU

1. IF
2. V / C
3. AUDIO
4. DEF.
5. VSM PRESET
6. VPS
7. AUTO PROGRAM

NEME OF REMOTE CONTOROL KEY

Names of key	key
INFORMATION	ⓘ
MUTING	
MENU	OK
FUNCTION UP/DOWN	▲ ▼
FUNCTION -/+	◀ ▶

Fig.2

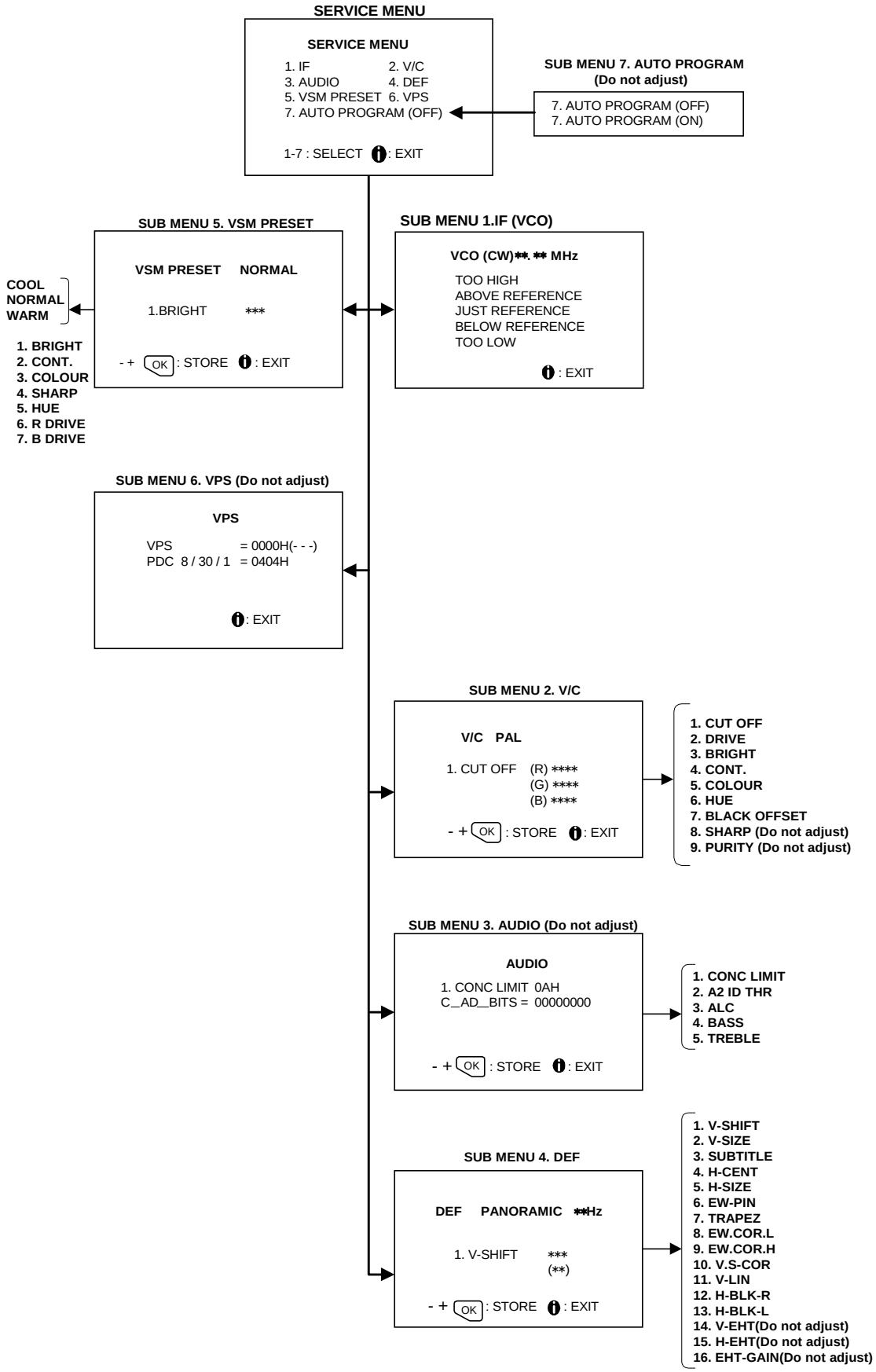

Fig. 3 SUB MENU SCREEN

(3) **Method of Setting**

1) Method of Setting **1.IF**

[VCO]

① 1 Key ····· Select 1.IF.

② The VCO (CW) screen will be displayed in yellow when the AFC voltage is at a certain level and in blue when it is at other levels.

③ INFORMATION Key ····· Return to the SERVICE MENU screen.

2) Method of setting **2.V/C, 3.AUDIO, 4.DEF** and **5.VSM PRESET.**

① 2～5 Key ····· Select one from **2. V/C, 3. AUDIO, 4. DEF** and **5. VSM PRESET**.

② FUNCTION UP/DOUN Key ····· Select setting items.

③ FUNCTION -/+ ····· Set (adjust) the setting values of the setting items.
(Use the number keys of the REMOTE CONTROL UNIT for setting of WHITE BALANE.
For the setting, refer to each item concerned.)

④ MENU Key ····· Memorize the setting value.
(Before storing the setting values in memory, do not press the CH, TV, POWER ON / OFF key - if you do, the values will not be stored in memory.)

⑤ INFOMATION Key ····· Return to the **SERVICE MENU** screen.

3) Method of setting **6.VPS** and **7.AUTO PROGRAM**.

6.VPS ····· This mode displayed monitor of VPS systems. **(Do not adjust)**

7.AUTO PROGRAM ····· When the MAIN POWER is turned on with the state of AUTO PROGRAM ON, you get a mode that initializes every existing set value including language selection. Because this mode is set at the factory upon completion of the adjustment, you need not to use it for service. **(Do not adjust in this mode.)**

(4) **Release of SERVICE MENU**

1) After completing the setting, return to the SERVICE MENU, then again press the INFORMATION key.

ADJUSTMENTS

CHECK ITEM

Item	Measuring instrument	Test point	Adjustment part	Description
Check of B1 Power Supply	**Signal Generator** **DC voltmeter** **Remote Control unit**	**TP-91(B1)** **TP-E(⏚)** **[X connector on POWER DEF PWB]**		1. Receive a any broadcast. 2. Push the “ZOOM” key and select the FULL mode. 3. Select 2. V/C from the SERVICE MENU. 4. Select 1. CUT OFF with Function UP / DOWN key. 5. Show one horizontal line with the 1 key. 6. Turn the SCREEN VR, the whole black screen display. 7. Connect a DC voltmeter to TP-91(B1) and TP-E(⏚). 8. Make sure that the voltage is DC144.5 ±2.0V. 9. Readjust the SCREEN VR to appear the horizontal line faintly, and cancel the horizontal line to press the 2 key.
Check of High Voltage	**Signal Generator** **DC volunteer** **Remote Control unit**	**CRT anode** **Chassis GND**		1. Receive a any broadcast. 2. Push the “ZOOM” key and select the FULL mode. 3. Select 2. V/C from the SERVICE MENU. 4. Select 1. CUT OFF with Function UP / DOWN key. 5. Show one horizontal line with the 1 key. 6. Turn the SCREEN VR, the whole black screen display. 7. Connect a DC voltmeter to CRT ANODE and chassis GND. 8. Make sure that the voltage is DC 30.0kV $^{+1kV}_{-1.5kV}$. 9. Readjust the SCREEN VR to appear the horizontal line faintly, and connect the horizontal line to press 2 key.

ADJUSTMENT OF FOCUS

Item	Measuring instrument	Test point	Adjustment part	Description
Adjustment of FOCUS	**Signal generator**		**FOCUS VR** **[In FBT]**	1. Receive a cross-hatch signal. Select FULL mode. 2. While watching the screen, adjust the FOCUS VR to make the vertical and horizontal lines as fine and sharp as possible. 3. Make sure that when the screen is darkened, the lines remain in good focus.

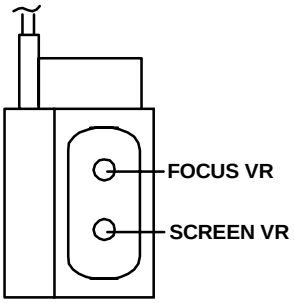

IF CIRCUIT ADJUSTMENT

Item	Measuring instrument	Test point	Adjustment part	Description
Adjustment of VCO	**Remote control unit**			● Under normal conditions, no adjustment is required. 1. Receive any broadcast. 2. Select 1.IF from the SERVICE MENU. 3. Check the characters colour of the JUST REFERENCE displayed to yellow.

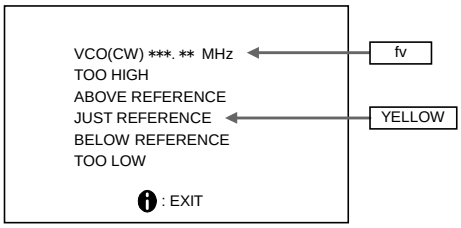

VSM PRESET ADJUST SETTING

Item	Measuring instrument	Test point	Adjustment part	Description
Setting of VSM PRESET	**Remote control unit**		**1. BRIGHT** **2. CONT.** **3. COLOUR** **4. SHARP** **5. HUE** **6. R DRIVE** **7. B DRIVE**	1. Select 5.VSM PRESET from the SERVICE MENU. 2. Select COOL with the MENU key of the remote control unit. 1. Adjust the FUNCTION UP/DOWN and -/+ key to bring the set values of 1.BRIGHT ～ 7. B DRIVE to the values shown in the table. 4. Press the MENU key and memorize the set value. 5. Respectively select the VSM PRESET mode for NORMAL and WARM, and make similar adjustment as in 3 above. 6. Press the MENU key and memorize the set value. ＊ Refer to OPERATING INSTRUCTIONS for the PICTURE MODE.

VSM preset mode / Setting item	COOL	NORMAL	WARM
1. BRIGHT SETTING VALUE	+0	+0	+0
2. CONT. SETTING VALUE	+12	+10	+2
3. COLOUR SETTING VALUE	+6	+0	-2
4. SHARP SETTING VALUE	+0	+0	-2
5. HUE SETTING VALUE	+0	+0	+0
6. R DRIVE SETTING VALUE	-20	+0	+16
7. B DRIVE SETTING VALUE	+23	+0	-13

SETTING VALUES OF VSM PRESET

VIDEO / CHROMA CIRCUIT ADJUSTMENT

The setting (adjustment) using the REMOTE CONTROL UNIT is made on the basis of the initial setting values.
The setting values which adjust the screen to the optimum condition can be different from the initial setting values.

Setting Item (Adjustment Item)		Initial setting value
1. CUTOFF	R	-100
	G	-100
	B	-100
2. DRIVE	R	+0
	B	+0
3. BRIGHT		+0
4. CONT.		-10

Setting item \ Colour system		Initial setting value		
		PAL	SECAM	NTSC 3.58 NTSC 4.43
5. COLOUR		+14	+0	+8
6. HUE		———	———	+2
7. BLACK OFFSET (SECAM)	R-Y	———	+0	———
	B-Y	———	+0	———
8. SHARP (Do not adjust)	28”Model	-7	←	←
	24”Model	-10	←	←
9. PURITY (Do not adjust)		OFF	←	←

Item	Measuring instrument	Test point	Adjustment part	Description
Adjustment of WHITE BALANCE (Low Light)	**Signal generator** **Remote control unit**		**1.CUT OFF** **(R)** * * * **(G)** * * * **(B)** * * * **SCREEN VR [In FBT]**	● Set the PICTURE MODE to NORMAL. 1. Receive a black and white signal (colour off). 2. Select 2. V/C from the SERVICE MENU. 3. Select 1.CUT OFF with the FUNCTION UP/DOWN key. 4. Push the “ZOOM” key and select the “PANORAMIC” mode. 5. Show one horizontal line with the 1 key. 6. Gradually turn the SCREEN VR from the left end to the right direction to bring one of the red, green or blue colour faintly visible. 7. Press 4～9 key, and bring out the other 2 colours and make one horizontal line visible in white. 8. Turn the SCREEN VR and bring one white horizontal line faintly visible. 9. Press 2 key, turn off 1.CUT OFF screen. 10. Press the MENU key and memorize the set value.

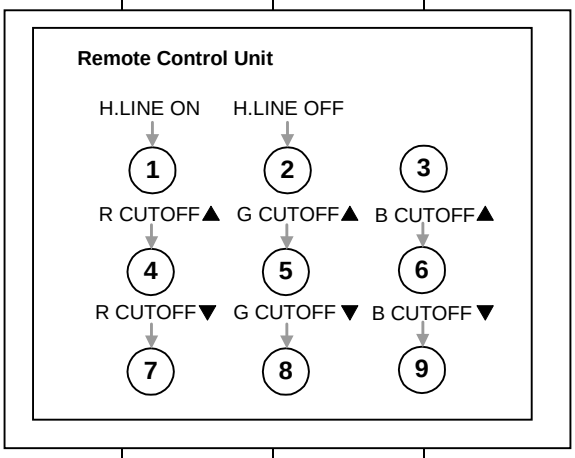

Item	Measuring instrument	Test point	Adjustment part	Description
Adjustment of WHITE BALANCE (High Light)	**Signal generator** **Remote control unit**		**2.DRIVE** **(R)** * * * **(B)** * * *	● The adjustment for Low Light WHITE BALANCE should be finished. ● Set the PICTURE MODE to NORMAL. 1. Receive a black and white signal (colour off). 2. Select 2.V/C from the SERVICE MENU. 3. Select 2.DRIVE with the FUNCTION UP/DOWN key. 4. Change the screen colour to white with 4 key or 7 key (Drive of Red), 6 key or 9 key (Drive of Blue). 5. Press the MENU key, and memorize the set values.
Adjustment of SUB BRIGHT	**Remote control unit**		**3.BRIGHT**	1. Receive any broadcast. 2. Select 2.V/C from the SERVICE MENU. 3. Select 3.BRIGHT with the FUNCTION UP/DOWN key. 4. Set the initial setting value with the FUNCTION -/+ key. 5. If the brightness is not the best with the initial setting value, make fine adjustment until you get the best brightness. 6. Press the MENU key and memorize the set value.
Adjustment of SUB CONT.	**Remote control unit**		**4.CONT.**	1. Receive any broadcast. 2. Select 2.V/C from the SERVICE MENU. 3. Select 4.CONT with the FUNCTION UP/DOWN key. 4. Set the initial setting value with the FUNCTION - / + key. 5. If the contrast is not the best with the initial setting value, make fine adjustment until you get the best contrast. 6. Press the MENU key and memorize the set value.

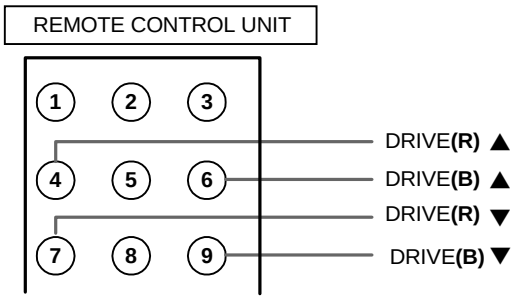

Item	Measuring instrument	Test point	Adjustment part	Description
Adjustment of SUB COLOUR Ⅰ	**Remote control unit**		**5.COLOUR (PAL～NTSC)**	**[Method of adjustment without measuring instrument]**
			PAL COLOUR	(PAL COLOUR) 1. Receive PAL broadcast. 2. Select 2.V/C from the SERVICE MENU. 3. Select 5.COLOUR with the FUNCTION UP/DOWN key. 4. Set the initial setting value for PAL COLOUR with the FUNCTION - or + key. 5. If the colour is not the best with the initial set value, make fine adjustment until you get the best colour. 6. Press the MENU key and memorize the set value.
			SECAM COLOUR (Only AV28WT5EPS AV24WT5EPS)	(SECAM COLOUR) 1. Receive a SECAM broadcast. 2. Make fine adjustment of SECAM COLOUR in the same manner as for above.
			NTSC COLOUR	(NTSC 3.58 COLOUR) 1. Input a NTSC 3.58MHz COMPOSITE VIDEO signal from the EXT terminal. 2. Make similar fine adjustment of NTSC 3.58 COLOUR in the same manner as for above.
				(NTSC 4.43 COLOUR) 1. When NTSC 3.58 is set, NTSC 4.43 will be automatically set at the respective values.

Item	Measuring instrument	Test point	Adjustment part	Description
Adjustment of SUB COLOUR Ⅱ	**Signal generator** **Oscilloscope** **Remote control unit**	**TP-47B** **TP-E(⏚)** **[CRT SOCKET PWB]**	**5.COLOUR (PAL～NTSC)**	**[Method of adjustment using measuring instrument]**
			PAL COLOUR	(PAL COLOUR) 1. Receive a PAL full field colour bar signal (75% white). 2. Select 2.V/C from the SERVICE MENU. 3. Select 5.COLOUR with the FUNCTION UP/DOWN key. 4. Set the initial setting value of PAL COLOUR with the FUNCTION - or + key. 5. Connect the oscilloscope between TP-47B and TP-E(⏚). 6. Adjust PAL COLOUR and bring the value of (A) in the illustration to the values as shown given billow (Voltage difference between white (W) and blue (B)). 7. Press the MENU key and memorize the setting value. **MODEL** / **VOLTAGE (W-B)** **28" model** / **+6V** **24" model** / **+4V**
			SECAM COLOUR (Only AV28WT5EPS AV24WT5EPS)	(SECAM COLOUR) 1. Receive a SECAM full field colour bar signal(75% white). 2. Set the initial setting value of SECAM COLOUR with the FUNCTION -/+ key. 3. Adjust SECAM COLOUR and bring the value of (A) in the illustration to the values as shown given billow (Voltage difference between white (W) and blue (B)). 4. Press the MENU key and memorize the setting value. **MODEL** / **VOLTAGE (W-B)** **28" model** / **+6V** **24" model** / **+4V**
			NTSC COLOUR	(NTSC 3.58 COLOUR) 1. Input a NTSC 3.58MHz COMPOSITE VIDEO signal (full field colour bar with 75% white) from the EXT terminal. 2. Set the initial setting value of NTSC 3.58 COLOUR with the FUNCTION -/+ key. 3. Adjust NTSC 3.58 COLOUR and bring the value of **(A)** of the illustration to 0V W-B. 4. Press the MENU key and memorize the setting value. (NTSC 4.43 COLOUR) 1. When NTSC 3.58 is set, NTSC 4.43 will be automatically set at the respective values.

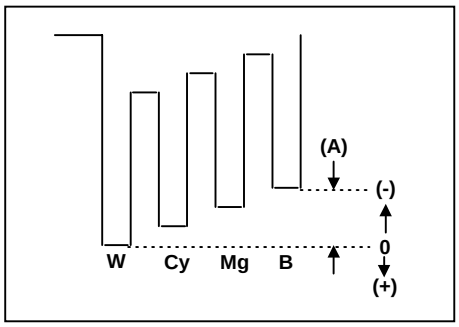

Item	Measuring instrument	Test point	Adjustment part	Description
Adjustment of SUB HUE Ⅰ	**Remote control unit**		**6.HUE**	**[Method of adjustment without measuring instrument]**
			NTSC 3.58 HUE	[NTSC 3.58 HUE] 1. Input a NTSC 3.58MHz COMPOSITE VIDEO signal (full field colour bar with 75% white) from the EXT terminal. 2. Select 2.V/C from the SERVICE MENU. 3. Select 6. HUE with the FUNCTION UP/DOWN key. 4. Set the initial setting value of NTSC 3.58 HUE with the FUNCTION -/+ key. 5. If you cannot get the best hue with the initial setting value, make fine adjustment until you get the best hue. 6. Press the MENU key and memorize the set value.
			NTSC 4.43 HUE	[NTSC 4.43 HUE] 1. When NTSC 3.58 is set, NTSC 4.43 will be automatically set at the respective values.
Adjustment of SUB HUE Ⅱ	**Signal generator** **Oscilloscope** **Remote control unit**	**TP-47B** **TP-E(⏚)** **[CRT SOCKET PWB]**	**6. HUE**	**[Method of adjustment using measuring instrument]**
			NTSC 3.58 HUE	[NTSC 3.58 HUE] 1. Input a NTSC 3.58MHz COMPOSITE VIDEO signal (full field colour bar with 75% white) from the EXT terminal. 2. Select 2.V/C from the SERVICE MENU. 3. Select 6. HUE with the FUNCTION UP/DOWN key. 4. Set the initial setting value of NTSC 3.58 HUE with the FUNCTION - or + key. 5. Connect the oscilloscope between TP-47B and TP-E(⏚) 6. Adjust NTSC 3.58 HUE to bring the value of **(B)** in the illustration to -4V (voltage difference between white (W) and magenta (Mg)). 7. Press the MENU key and memorize the setting value
			NTSC 4.43 HUE	[NTSC 4.43 HUE] 1. When NTSC 3.58 is set, NTSC 4.43 will be automatically set at the respective values.

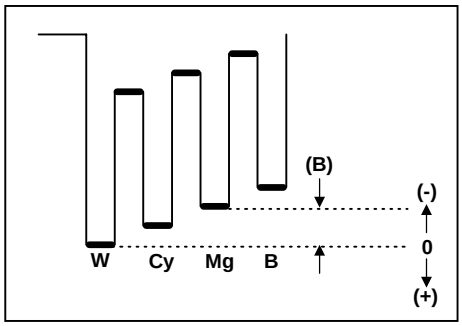

[Only AV28WT5EPS / AV24WT5EPS]

Item	Measuring instrument	Test point	Adjustment part	Description
Adjustment of BLACK OFFSET (SECAM) Ⅰ	**Remote control unit**		**7. BLACK OFFSET** **(R-Y) ***** **(B-Y) *****	**[Method of adjustment without measuring instrument]** 1. Receive a SECAM broadcast. 2. Select 2. V/C from SERVICE MENU. 3. Select 7. BLACK OFFSET with the FUNCTION UP/DOWN key. 4. Set the initial setting value for BLACK OFFSET (R-Y) and (B-Y) with **4** and **7** or **6** and **9** keys of the remote control. 5. If the picture is not the best with the initial setting value, make fine adjustment until you get the best picture. 6. Press the MENU key and memorize the setting value.
Adjustment of BLACK OFFSET (SECAM) Ⅱ	**Signal generator** **Oscilloscope** **Remote control unit**	**35 PIN (R-Y)** **36 PIN (B-Y)** **IC-301 ON MAIN PWB**	**7. BLACK OFFSET** **(R-Y) ***** **(B-Y) *****	**[Method of adjustment using measuring instrument]** 1. Receive a SECAM COLOUR bar signal (full field colour bar 75% white). 2. Select 2. V/C from SERVICE MENU. 3. Select 7. BLACK OFFSET with the FUNCTION UP/DOWN key. 4. Connect the oscilloscope between **35** pin of IC-301 and TP-E (⏚). 5. By using **4** and **7** keys of the remote control, adjust the BLACK OFFSET (R-Y) so that it becomes the waveform changes from (a) to (b) shown in the figure. 6. Connect the oscilloscope between **36** pin of IC-301 and TP-E. 7. By using **6** and **9** keys of the remote control, adjust the BLACK OFFSET (B-Y) so that it becomes the waveform changes from (c) to (d) shown in the figure. 8. If the picture is not the best with the adjusted picture, make fine adjustment until you get the best picture. 9. Press the MENU key and memorize the setting value.

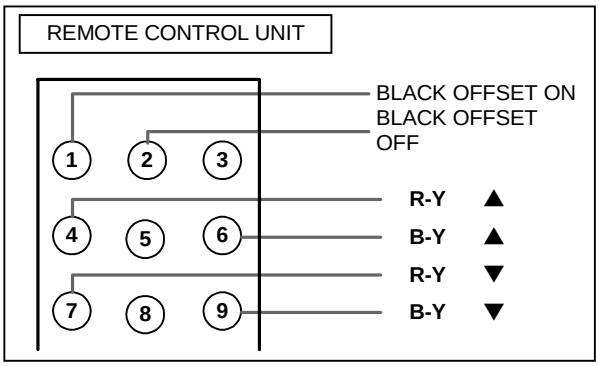

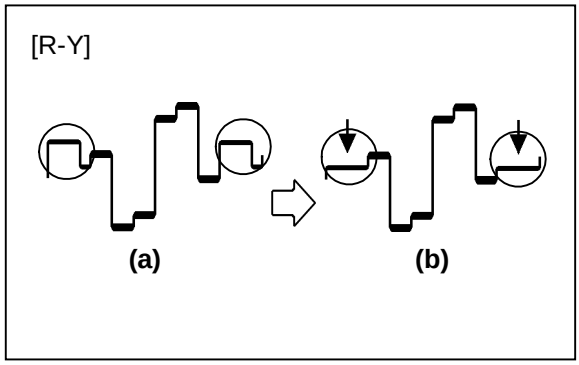

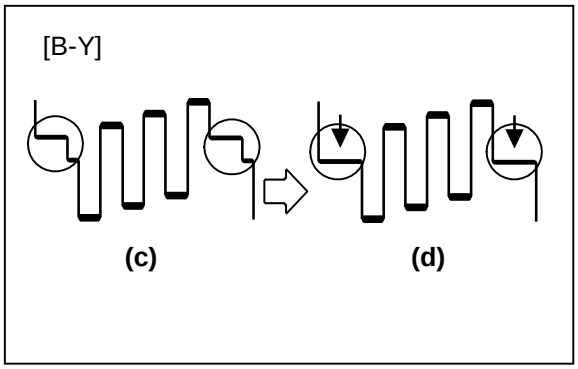

DEFLECTION CIRCUIT ADJUSTMENT

There are 7 modes of the adjustment (1) 50Hz mode (①PANORAMIC ②FULL ③REGULAR ④14:9 ZOOM ⑤16:9 ZOOM ⑥16:9 ZOOM SUB TITLE), (2) 60Hz mode (each aspect mode) ····· depending upon the kind of signals (vertical frequency 50Hz / 60Hz).

- **The adjustment using the remote control unit is made on the basis of the initial setting values.**
- **When the 50Hz PANORAMIC mode has been established, the setting of other modes will be done automatically. However, if the picture quality has not been optimized, adjust each mode again, respectively.**
- **The setting values which adjust the screen to the optimum condition can be different from the initial setting values.**

Initial setting value (1/2) **(28" Model)**

Setting item	Adjustment name	Initial setting value							
		PANORAMIC		14:9 ZOOM		16:9 ZOOM		16:9 ZOOM SUB TITLE	
		50Hz	60Hz	50Hz	60Hz	50Hz	60Hz	50Hz	60Hz
1. V-SHIFT	Vertical center	+2	-1	+0	+0	+0	+0	+0	+0
2. V-SIZE	Vertical height	+6	-3	+16	+15	+36	+34	+38	+36
3. SUBTITLE	SUBTITLE BOTTOM Vertical Linearity	-8	+0	+0	+0	+0	+0	+11	+15
4. H-CENT	Horizontal center	-8	+4	+0	+1	+0	+0	+0	+0
5. H-SIZE	Horizontal width	+10	+0	-13	-14	-6	-6	-6	-6
6. EW-PIN	Side pin correction	-23	+0	-1	-1	-1	-1	-1	-1
7. TRAPEZ	Trapezoidal distortion correction	+2	-1	-1	+0	-1	+0	-1	+0
8. EW.COR.L	CORNER PIN correction Low side	+0	+0	+0	+0	+0	+0	+0	+0
9. EW.COR.H	CORNER PIN correction High side	+0	+0	+0	+0	+0	+0	+0	+0
10.V.S-COR	Vertical height correction	+4	+0	+0	+0	+0	+0	+4	+0
11.V-LIN	Vertical Linearity	-1	+0	+0	+0	+1	+0	+0	+0
12.H-BLK-R	BLANKING POSITION of Right side	+0	+0	+118	+119	+0	+0	+0	+0
13.H-BLK-L	BLANKING POSITION of Left side	+0	+0	+28	+24	+0	+0	+0	+0
14.V-EHT (Do not adjust)	V size correction level caused by EHT change	-4	+0	+0	+0	+0	+0	+0	+0
15.H-EHT (Do not adjust)	H size correction level caused by EHT change	-3	+0	+0	+0	+0	+0	+0	+0
16.EHT-GAIN (Do not adjust)	Size correction gain caused by EHT change	+0	+0	+0	+0	+0	+0	+0	+0

Initial setting value (2/2)

Setting item	Adjustment name	Initial setting value			
		FULL		REGULAR	
		50Hz	60Hz	50Hz	60Hz
1. V-SHIFT	Vertical center	-1	+0	+0	+0
2. V-SIZE	Vertical height	-6	-6	-3	-3
3. SUBTITLE	SUBTITLE BOTTOM Vertical Linearity	+0	+0	+0	+0
4. H-CENT	Horizontal center	+0	+0	+1	+1
5. H-SIZE	Horizontal width	-6	-6	-22	-23
6. EW-PIN	Side pin correction	-1	+0	+0	+0
7. TRAPEZ	Trapezoidal distortion correction	+0	+0	-1	-1
8. EW.COR.L	CORNER PIN correction Low side	+0	+0	+0	+0
9. EW.COR.H	CORNER PIN correction High side	+0	+0	+0	+0
10.V.S-COR	Vertical height correction	+0	+0	+0	+0
11.V-LIN	Vertical Linearity	+0	+0	+0	+0
12.H-BLK-R	BLANKING POSITION of Right side	+0	+0	+118	+119
13.H-BLK-L	BLANKING POSITION of Left side	+0	+0	+31	+25
14.V-EHT (Do not adjust)	Vsize correction level caused by EHT change	+0	+0	+0	+0
15.H-EHT (Do not adjust)	Hsize correction level caused by EHT change	+0	+0	+0	+0
16.EHT-GAIN (Do not adjust)	Size correction gain caused by EHT change	+0	+0	+0	+0

Initial setting value (1/2) (24” Model)

Setting item	Adjustment name	Initial setting value							
		PANORAMIC		14:9 ZOOM		16:9 ZOOM		16:9 ZOOM SUB TITLE	
		50Hz	60Hz	50Hz	60Hz	50Hz	60Hz	50Hz	60Hz
1. V-SHIFT	Vertical center	-10	-1	+0	+0	+0	+0	+1	+0
2. V-SIZE	Vertical height	+5	-3	+14	+14	+36	+35	+33	+35
3. SUBTITLE	SUBTITLE BOTTOM Vertical Linearity	-8	+0	+0	+0	+0	+0	+9	+12
4. H-CENT	Horizontal center	-7	+5	+0	+1	+0	+0	+0	+0
5. H-SIZE	Horizontal width	+14	+0	-17	-16	-10	-11	-10	-10
6. EW-PIN	Side pin correction	-4	+1	-3	-4	-3	-2	-4	-5
7. TRAPEZ	Trapezoidal distortion correction	+1	-1	-1	-1	-1	-2	-1	-1
8. EW.COR.L	CORNER PIN correction Low side	+0	+0	+0	+0	+0	+0	+0	+0
9. EW.COR.H	CORNER PIN correction High side	+0	+0	+0	+0	+0	-1	+1	+0
10.V.S-COR	Vertical height correction	-11	+0	-0	-0	+0	+0	+0	+0
11.V-LIN	Vertical Linearity	+0	+0	+0	+0	+0	+0	-2	-1
12.H-BLK-R	BLANKING POSITION of Right side	+0	+0	+116	+118	+0	+0	+0	+0
13.H-BLK-L	BLANKING POSITION of Left side	+0	+0	+32	+24	+0	+0	+0	+0
14.V-EHT (Do not adjust)	Vsize correction level caused by EHT change	-4	+0	+0	+0	+0	+0	+0	+0
15.H-EHT (Do not adjust)	Hsize correction level caused by EHT change	-3	+0	+0	+0	+0	+0	+0	+0
16.EHT-GAIN (Do not adjust)	Size correction gain caused by EHT change	+0	+0	+0	+0	+0	+0	+0	+0

Initial setting value (2/2)

Setting item	Adjustment name	Initial setting value			
		FULL		REGULAR	
		50Hz	60Hz	50Hz	60Hz
1. V-SHIFT	Vertical center	+0	+0	+0	+0
2. V-SIZE	Vertical height	-6	-5	-5	-3
3. SUBTITLE	SUBTITLE BOTTOM Vertical Linearity	+0	+0	+0	+0
4. H-CENT	Horizontal center	+0	+0	+0	+1
5. H-SIZE	Horizontal width	-10	-11	-30	-30
6. EW-PIN	Side pin correction	-2	-3	-2	-3
7. TRAPEZ	Trapezoidal distortion correction	+0	+0	+0	-1
8. EW.COR.L	CORNER PIN correction Low side	+0	+0	+0	+0
9. EW.COR.H	CORNER PIN correction High side	+0	+0	+0	+0
10.V.S-COR	Vertical height correction	+0	+0	+0	+0
11.V-LIN	Vertical Linearity	+0	+0	+0	+0
12.H-BLK-R	BLANKING POSITION of Right side	+0	+0	+116	+113
13.H-BLK-L	BLANKING POSITION of Left side	+0	+0	+33	+24
14.V-EHT (Do not adjust)	Vsize correction level caused by EHT change	+0	+0	+0	+0
15.H-EHT (Do not adjust)	Hsize correction level caused by EHT change	+0	+0	+0	+0
16.EHT-GAIN (Do not adjust)	Size correction gain caused by EHT change	+0	+0	+0	+0

Item	Measuring instrument	Test point	Adjustment part	Description
Adjustment of V-SHIFT	**Signal generator** **Remote control unit**		**1.V- SHIFT**	[50Hz PANORAMIC mode] 1. Receive a circle pattern signal of vertical frequency 50Hz. 2. Select 4.DEF from the SERVICE MENU. 3. Select 1.V-SHIFT with the FUNCTION UP/DOWN key. 4. Adjust V-SHIFT to make **A = B**. 5. Press the MENU key and memorize the set value. ∗ For JK chassis Set all data except for "PANORAMIC" to "0". Adjust V.CENTER of other aspects with "PANORAMIC" mode while also taking their positions into consideration. If you want to obtain horizontal lines with less noise on the screen, adjust V.LIN instead of "PANORAMIC" mode.
Adjustment of V-SIZE & SUBTITLE			**2.V-SIZE** **3.SUBTITLE**	6. Receive a cross-hatch signal. 7. Select 2.V-SIZE and set the initial setting value. 8. Adjust V-SIZE and make sure that the vertical screen size of the picture size is in the bellow table. 9. Press the MENU key and memorize the set value. 10. When adjust the [SUBTITLE], select “3.SUBTITLE” and adjust to under part of picture size. 11. Input a NTSC VIDEO signal (60Hz) from the EXT terminal, and make sure that the vertical screen size is in the table below. 12. Press the MENU key and memorize the set value.

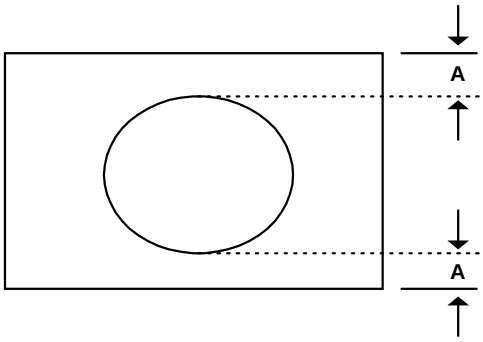

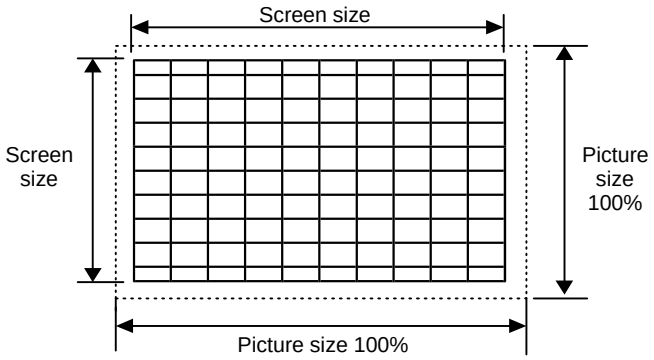

ASPECT MODE	PANORAMIC	14 : 9 ZOOM	16 : 9 ZOOM	16 : 9 ZOOM SUB TITLE	FULL	REGULAR
SCREEN TOP	87%	80%	70%	70%	92%	92%
SCREEN BOTTOM	87%	80%	70%	83%	92%	92%

[SCREEN SIZE]

Item	Measuring instrument	Test point	Adjustment part	Description
Adjustment of H.CENTER			**4.H-CENT.**	6. Receive a circle pattern signal. 7. Select 4.H-CENT and set the initial setting value. 8. Adjust H-CENT to make C=D. 9. Press the MENU key and memorize the set value.
Adjustment of H.SIZE			**5.H-SIZE**	10. Receive a circle patteern signal. 11. Select 5.H-SIZE and set the initial setting value. 12. Adjust H-SIZE and make sure that the horizontal screen size of the picture size is in the bellow table. 13. Press the MENU key and memorize the set value. ※ The numeric of the REGULAR and 14:9 ZOOM modes are shown the length of the 90% horizontal size position(**L**) as shown in the figure above. 14. Input a NTSC VIDEO signal (60Hz) from the EXT terminal, and make sure that the horizontal screen size of the each ASPECT mode is in the below table. 15. Press the MENU key and memorize the set value.
Adjustment of EW-PIN			**6.EW-PIN**	16. Select 6.EW-PIN and set the initial setting value 17. Adjust EW-PIN and make the 2nd.vertical lines at the left and right edges of the screen straight. Also make sure that the 3rd vertical lines are straight. 18. Press the MENU key and memorize the set value.

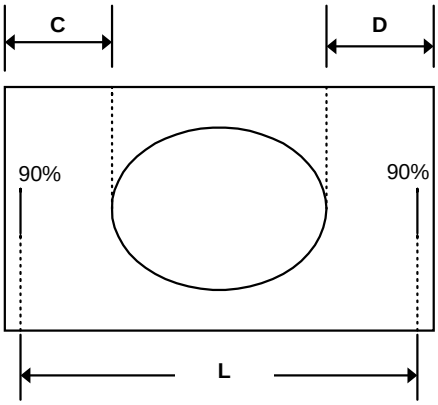

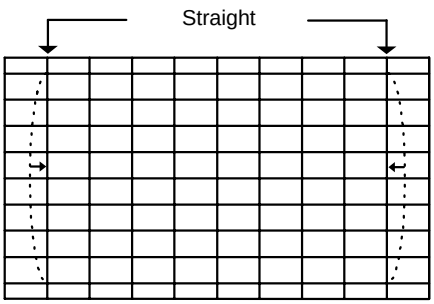

ASPECT MODE		PANORAMIC	14:9 ZOOM	16:9 ZOOM	16:9 ZOOM SUB TITLE	FULL	REGULAR
H SIZE	**28”**	PAL=95% NTSC=94%	L=495mm	92%	92%	92%	L=440mm
	24”	PAL=95% NTSC=94%	L=425mm	92%	92%	92%	L=380mm

[SCREEN SIZE]

Item	Measuring instrument	Test point	Adjustment part	Description
Adjustment of TRAPEZ	**Signal generator Remote control unit**		**7.TRAPEZ**	19. Receive a cross-hatch signal. 20. Select 7.TRAPEZ with the FUNCTION UP/DOWN key. 21. Set the initial setting value of TRAPEZ with the FUNCTION - or + key. 22. Adjust TRAPEZ and bring the VERTICAL lines at the right and left edges of the screen parallel . 23. Press the MENU key and memorize the set value.
	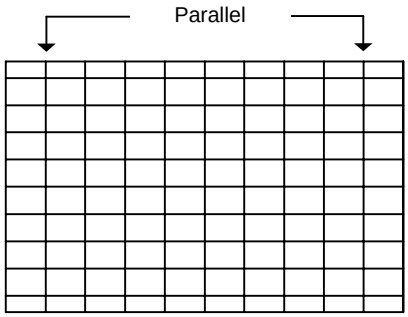			
Adjustment of EW. COR. L/H	**Signal generator Remote control unit**		**8.EW. COR. L** **9.EW. COR. H**	24. Select 8.EW. COR. L with the FUNCTION UP / DOWN key. 25. Set the initial setting value of EW. COR. L with the FUNCTION – or + key. 26. Adjust EW. COR. L, and bring the straight line at the low corner. 27. Select 9.EW. COR. H with the FUNCTION UP / DOWN key. 28. Set the initial setting value of EW. COR. H with the FUNCTION – or + key. 29. Adjust EW. COR. H, and bring the straight line at the upper corner. 30. Press the MENU key and memorize the set value.
	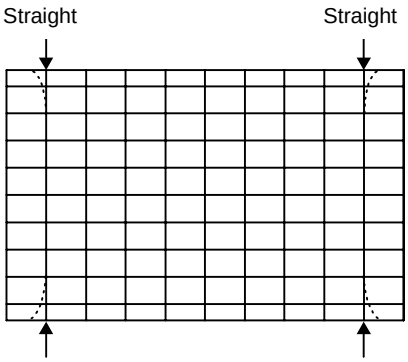			
Adjustment of V-S.CR & V.LINEARITY			**10. V-S.CR** **11. V-LIN**	● **When the vertical linearity has been deteriorated remarkably, perform the following steps.** 31. Receive a cross-hatch signal. 32. Select **11.V-LIN** with the FUNCTION UP/DOWN key. 33. Set the initial setting value of **11.V-LIN** with the FUNCTION - / + key. 34. Select **10.V-S.COR** with the FUNCTION UP / DOWN key. 35. Set the initial setting value of **10.V-S.COR** with the FUNCTION - / + key. 36. Adjust **11.V-LIN** and **10.V-S.COR** so that the spaces of each line on **TOP, CENTER** and **BOTTOM** become uniform. NOTE : Do not adjust “PANORAMIC” & “16 : 9 ZOOM SUBTITLE” mode. * For JK chassis On account of CRT (ITC), set V-S.COR except for "PANORAMIC" mode to the minimum. When adjusting "PANORAMIC" mode, slightly expand the space at the CENTER while taking the circularity at the CENTER into consideration.
	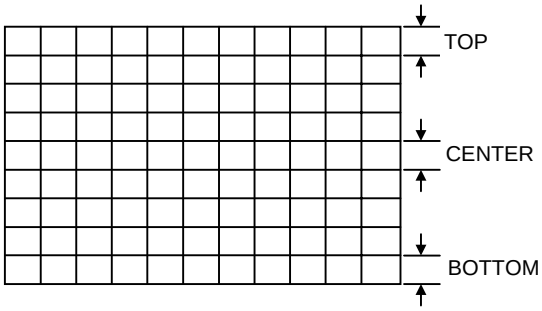			

Item	Measuring instrument	Test point	Adjustment part	Description
				At first the adjustment in 50Hz-PANORAMIC mode should be done, then the data for the other zoom mode is corrected in the respective value at the same time. And confirm the deflection adjustment initial setting value in 60Hz(NTSC EXT mode) PANORAMIC mode. If the adjustment in 50Hz each zoom mode has been done and stored, the data for the same aspect modes in 60Hz is corrected in the respective value. Only the data for the other aspect mode in 60Hz is corrected for itself.

H. BLANKING ADJUSTMENT

Item	Measuring instrument	Test point	Adjustment part	Description
Adjustment of H.BLANKING			**H.BLK Capacitor [On MAIN PWB]**	1. Receive the PAL circle pattern signal. 2. Select 4.DEF from the SERVICE MENU. 3. Select the aspect [14:9 ZOOM] mode. 4. Select 12.H-BLK-R with the FUNCTION UP/DOWN key and adjust H-BLANKING so that 92% of the picture on the right side is displayed. 5. Select 13.H-BLK-L with the FUNCTION UP/DOWN key and adjust H-BLANKING so that 92% of the picture on the left side is displayed. 6. Press the MENU key and memorize the set value. 7. Select the aspect [REGULAR] mode. 8. Select 12.H-BLK-R with the FUNCTION UP/DOWN key and adjust H'.BLANKING so that 92% of the picture on the right side is displayed. 9. Select 13.H-BLK-L with the FUNCTION UP/DOWN key and adjust H-BLANKING so that 92% of the picture on the left side is displayed. 10. Press the MENU key and memorize the set value.

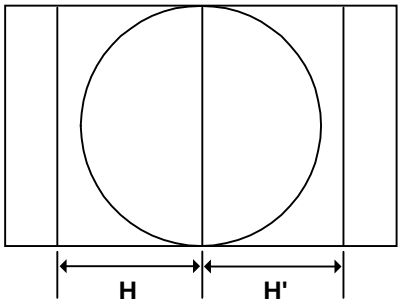

AUDIO CIRCUIT ADJUSTMENT

- Do not touch 3.AUDIO(1. CONC LIMIT, 2. A2 ID THR, 3. ALC, 4. BASS, 5. TREBLE) of the SERVICE MENU as it requires no adjustment.

3. AUDIO

Setting item	Variable range	fixed value
1. CONC LIMIT***(Do not adjust)***	00H ～ FFH	0AH
2. A2 ID THR***(Do not adjust)***	00H ～ FFH	19H
3. ALC ***(Do not adjust)***	20MSEC → 2SEC → 4SEC → 8SEC	――――――
4. BASS ***(Do not adjust)***	-17 ～ +17	+0
5. TREBLE ***(Do not adjust)***	-17 ～ +17	+0

VICTOR COMPANY OF JAPAN, LIMITED
HOME AV NETWORK BUSINESS UNIT 1106 Heta, Iwai-city, Ibaraki-prefecture, 306-0698, Japan

AV28WT5EPS-U #4 AV24WT5EPS-U #4
AV28WT5EIS-U #4 AV24WT5EIS-U #4
AV28WT5EKS-U #3 AV24WT5EKS-U #3

Printed in Japan
VP 0101
DP2051

PARTS LIST

CAUTION

- The parts identified by the ⚠ symbol are important for the safety. Whenever replacing these parts, be sure to use specified ones to secure the safety .
- The parts not indicated in this Parts List and those which are filled with lines —— in the Parts No. columns will not be supplied.
- P. W. Board Ass'y will not be supplied, but those which are filled with the Parts No. in the Parts No. columns will be supplied.

ABBREVIATIONS OF RESISTORS, CAPACITORS AND TOLERANCES

RESISTORS		CAPACITORS	
C R	Carbon Resistor	C CAP.	Ceramic Capacitor
F R	Fusible Resistor	E CAP.	Electrolytic Capacitor
P R	Plate Resistor	M CAP.	Mylar Capacitor
V R	Variable Resistor	HV CAP.	High Voltage Capacitor
HV R	High Voltage Resistor	MF CAP.	Metalized Film Capacitor
MF R	Metal Film Resistor	MM CAP.	Metalized Mylar Capacitor
MG R	Metal Glazed Resistor	MP CAP.	Metalized Polystyrol Capacitor
MP R	Metal Plate Resistor	PP CAP.	Polypropylene Capacitor
OM R	Metal Oxide Film Resistor	PS CAP.	Polystyrol Capacitor
CMF R	Coating Metal Film Resistor	TF CAP.	Thin Film Capacitor
UNF R	Non-Flammable Resistor	MPP CAP.	Metalized Polypropylene Capacitor
CH V R	Chip Variable Resistor	TAN. CAP.	Tantalum Capacitor
CH MG R	Chip Metal Glazed Resistor	CH C CAP.	Chip Ceramic Capacitor
COMP. R	Composition Resistor	BP E CAP.	Bi-Polar Electrolytic Capacitor
LPTC R	Linear Positive Temperature Coefficient Resistor	CH AL E CAP.	Chip Aluminum Electrolytic Capacitor
		CH AL BP CAP.	Chip Aluminum Bi-Polar Capacitor
		CH TAN. E CAP.	Chip Tantalum Electrolytic Capacitor
		CH AL BP E CAP.	Chip Tantalum Bi-Polar Electrolytic Capacitor

TOLERANCES									
F	G	J	K	M	N	R	H	Z	P
±1%	±2%	±5%	±10%	±20%	±30%	+30% -10%	+50% -10%	+80% -20%	+100% -0%

CONTENTS

AV28WT5EPS / AV28WT5EIS / AV28WT5EKS

■ **USING PW BOARD & REMOTE CONTROL UNIT** **40**
■ **REMOTE CONTROL UNIT PARTS LIST** **40**
■ **EXPLODED VIEW PARTS LIST** **42**
■ **EXPLODED VIEW** **42**
■ **PRINTED WIRING BOARD PARTS LIST**

AV28WT5EPS / AV28WT5EIS

- MAIN PW BOARD ASS'Y **44**
- POWER & DEF. PW BOARD ASS' Y **46**
- CRT SOCKET PW BOARD ASS'Y **48**
- FRONT CONTROL PW BOARD ASS'Y **48**
- AV SEL. PW BOARD ASS'Y **49**

AV-28WT5EKS

- MAIN PW BOARD ASS'Y **51**
- POWER & DEF. PW BOARD ASS' Y **53**
- CRT SOCKET PW BOARD ASS'Y **53**
- FRONT CONTROL PW BOARD ASS'Y **53**
- AV SEL. PW BOARD ASS'Y **53**

■ **PACKING** **55**
■ **PACKING PARTS LIST** **55**

USING PW BOARD & REMOTE CONTROL UNIT

Model / PWB ASS'Y	AV28WT5EPS	AV28WT5EIS	AV28WT5EKS
MAIN PWB	SJK-1712A-U2	←	SJK-1912A-U2
POWER & DEF. PWB	SJK-2512A-U2	←	←
CRT SOCKET PWB	SJK-3512A-U2	←	←
FRONT CONTROL PWB	SJK-8512A-U2	←	←
AV SEL. PWB	SJK0S712A-U2	←	SJK0S912A-U2
REMOTE CONTROL UNIT	RM-C54-1C	RM-C55-1C	RM-C55-1C

REMOTE CONTROL UNIT PARTS LIST

⚠ Ref.No.	Part No.	Part Name	Description
1	2AA030733	BATTERY COVER	
2	2AA030732	SLIDE COVER	(RM-C54-1C)
2	2AA030740	SLIDE COVER	(RM-C55-1C)

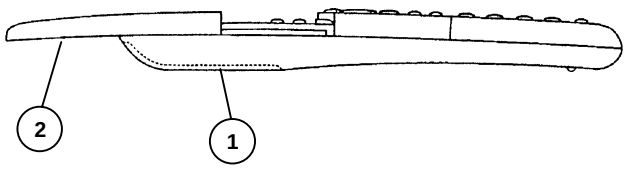

CONTENTS

AV24WT5EPS / AV24WT5EIS / AV24WT5EKS

■ **USING PW BOARD & REMOTE CONTROL UNIT** **41**
■ **REMOTE CONTROL UNIT PARTS LIST** **41**
■ **EXPLODED VIEW PARTS LIST** **56**
■ **EXPLODED VIEW** **56**
■ **PRINTED WIRING BOARD PARTS LIST**

AV24WT5EPS / AV24WT5EIS

- MAIN PW BOARD ASS'Y **58**
- POWER & DEF. PW BOARD ASS' Y **60**
- CRT SOCKET PW BOARD ASS'Y **62**
- FRONT CONTROL PW BOARD ASS'Y **62**
- AV SEL. PW BOARD ASS'Y **63**

AV24WT5EKS

- MAIN PW BOARD ASS'Y **65**
- POWER & DEF. PW BOARD ASS' Y **67**
- CRT SOCKET PW BOARD ASS'Y **67**
- FRONT CONTROL PW BOARD ASS'Y **67**
- AV SEL. PW BOARD ASS'Y **67**

■ **PACKING** **69**
■ **PACKING PARTS LIST** **69**

USING PW BOARD & REMOTE CONTROL UNIT

Model / PWB ASS'Y	AV24WT5EPS	AV24WT5EIS	AV24WT5EKS
MAIN PWB	SJK-1713A-U2	←	SJK-1913A-U2
POWER & DEF. PWB	SJK-2513A-U2	←	←
CRT SOCKET PWB	SJK-3513A-U2	←	←
FRONT CONTROL PWB	SJK-8513A-U2	←	←
AV SEL. PWB	SJK0S713A-U2	←	SJK0S913A-U2
REMOTE CONTROL UNIT	RM-C54-1C	RM-C55-1C	RM-C55-1C

REMOTE CONTROL UNIT PARTS LIST

⚠ Ref.No.	Part No.	Part Name	Description
1	2AA030733	BATTERY COVER	
2	2AA030732	SLIDE COVER	(RM-C54-1C)
2	2AA030740	SLIDE COVER	(RM-C55-1C)

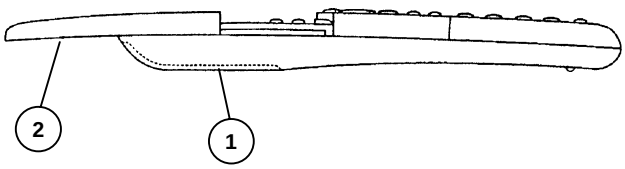

AV28WT5EPS / AV28WT5EIS / AV28WT5EKS

EXPLODED VIEW PARTS LIST

⚠	Ref.No.	Part No.	Part Name	Description
⚠	V01	W66QBD240X03	PICTURE TUBE	Inc.DY,PC MAGNET,WEDGE
⚠	L01	QQW0102-001	DEG COIL	
⚠	T2551	QQH0093-001	FB TRANSF.	
	1	CHGB0029-0E-N	BRAIDED ASSY	
	2	CHGB0017-0A-N	BRAIDED SUB ASSY	
⚠	3	CM12931-A01-E	CONTROL BASE	
	4	CM36311-001	KNOB CAP	
	5	CHFD119-06BD	FFC WIRE	
⚠	6	LC11019-001B-U	CHASSIS BASE	
⚠	7	LC11020-001C-U	AV BOARD	
	8	QYSBSB3012M	TAPPING SCREW	(×2)
⚠	9	QMPK160-185-JC	POWER CORD	(CN-PW) [AV28WT5EPS]
⚠	9	QMPN130-185-JC	POWER CORD	(CN-PW) [AV28WT5EIS][AV28WT5EKS]
⚠	10	CM46618-A01-E	POWER CORD CLAMP	
⚠	11	CM12582-A05-E	REAR COVER	
	12	QYSBSAG4016N	TAPPING SCREW	(×13)
⚠	13	LC20433-008A-U	RATING LABEL	[AV28WT5EPS]
⚠	14	LC20434-008A-U	RATING LABEL	[AV28WT5EPS]
⚠	14	LC20080-015A-U	RATING LABEL	[AV28WT5EIS]
⚠	14	LC20091-023A-U	RATING LABEL	[AV28WT5EKS]
	15	CM48076-A01	CDS WINDOW	
	16	CM48125-010	JVC MARK	
	17	CM36223-A01	LED LENS	
	18	QAS0043-001	SPEAKER	(×2)SP01,SP02
⚠	100	CM12677-00Y-E	F.CABINET ASSY	Inc.No.101～105
	101	CM22898-020-E	DOOR	(SERVICE)
	102	CM48229-00A-C	DOOR LATCH	
	103	CM36224-020-E	OPERATION SHEET	
	104	AEM3149-001-E	SPRING	
	105	CM36225-014-E	POWER KNOB	(SERVICE)

EXPLODED VIEW

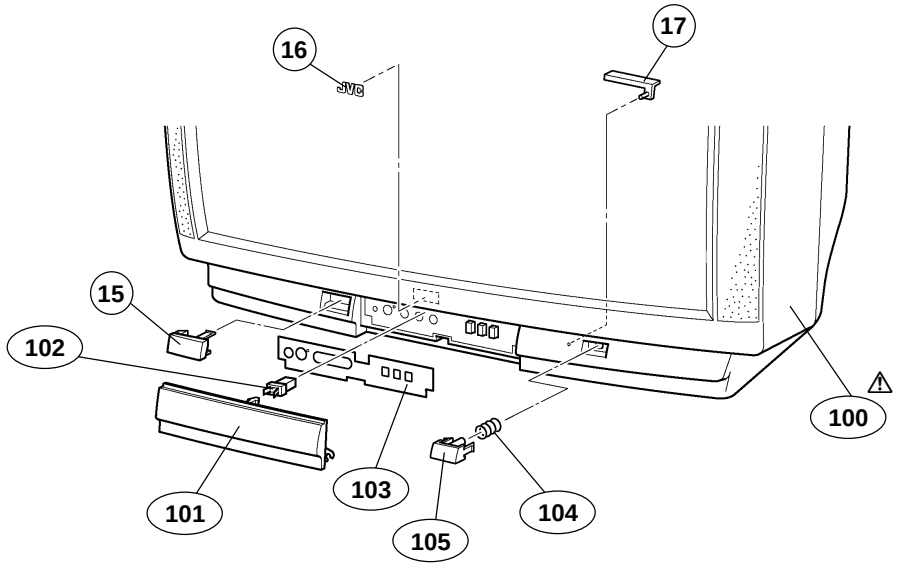

AV28WT5EPS / AV28WT5EIS / AV28WT5EKS

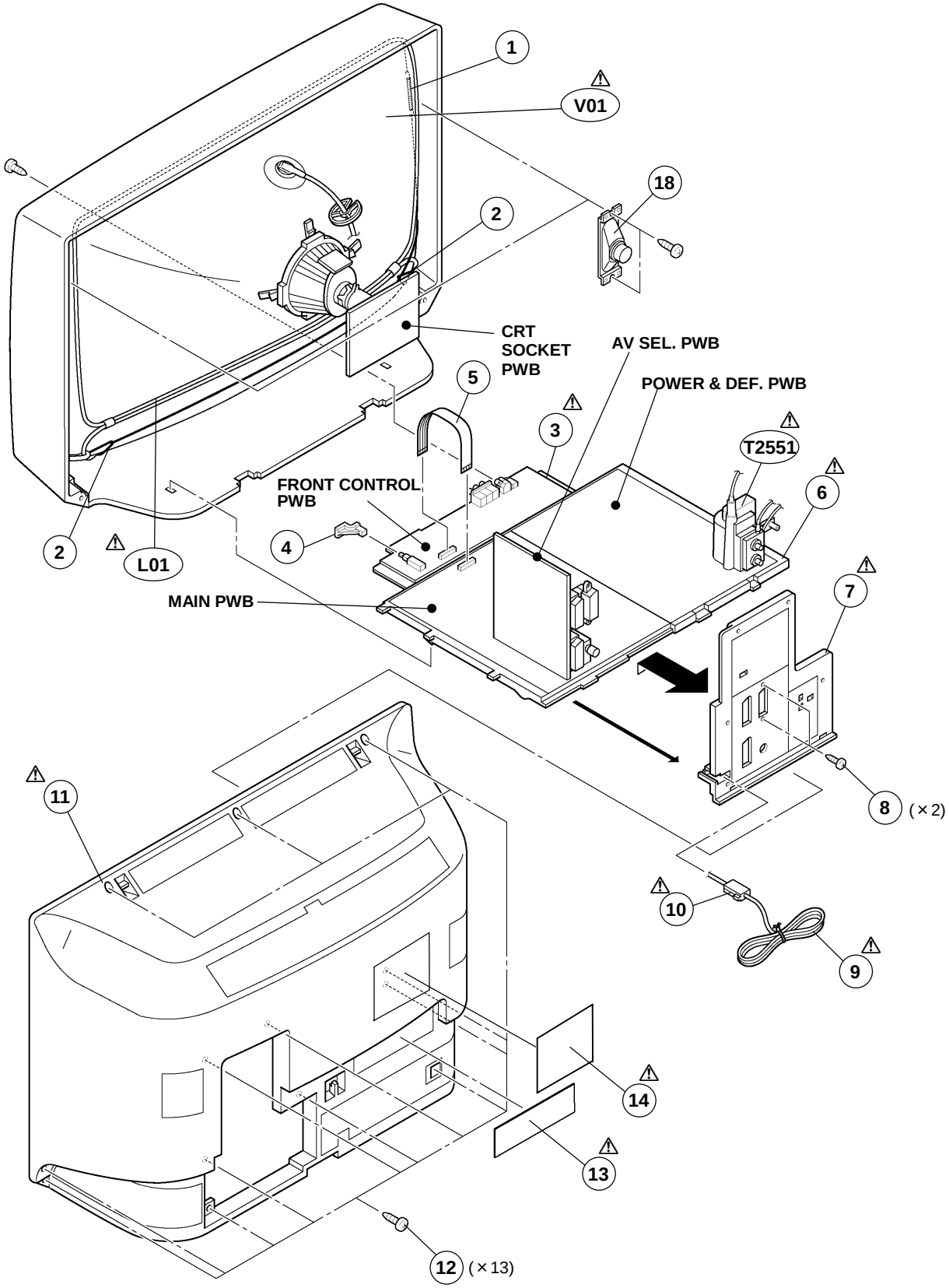

AV28WT5EPS / AV28WT5EIS

PRINTED WIRING BOARD PARTS LIST

■MAIN P.W. BOARD ASS'Y (SJK-1712A-U2)

⚠ Symbol No.	Part No.	Part Name	Description
RESISTOR			
R1001	NRSA02J-102X	MG R	1kΩ 1/10W J
R1002-03	NRSA02J-0R0X	MG R	0.0Ω 1/10W J
R1004-06	NRSA02J-102X	MG R	1kΩ 1/10W J
R1007	NRSA02J-104X	MG R	100kΩ 1/10W J
R1008	NRSA02J-0R0X	MG R	0.0Ω 1/10W J
R1009-10	NRSA02J-104X	MG R	100kΩ 1/10W J
R1304	QRG01GJ-121	OM R	120Ω 1W J
R1305	NRSA02J-562X	MG R	5.6kΩ 1/10W J
R1306	NRSA02J-222X	MG R	2.2kΩ 1/10W J
R1307	NRSA02J-102X	MG R	1kΩ 1/10W J
R1308	NRSA02J-471X	MG R	470Ω 1/10W J
R1309	NRSA02J-222X	MG R	2.2kΩ 1/10W J
R1310-11	NRSA02J-391X	MG R	390Ω 1/10W J
R1312-13	NRSA02J-101X	MG R	100Ω 1/10W J
R1314	NRSA02J-562X	MG R	5.6kΩ 1/10W J
R1316	NRSA02J-224X	MG R	220kΩ 1/10W J
R1317	NRSA02J-101X	MG R	100Ω 1/10W J
R1318-21	NRSA02J-102X	MG R	1kΩ 1/10W J
R1327	NRSA02J-471X	MG R	470Ω 1/10W J
R1328-29	NRSA02J-102X	MG R	1kΩ 1/10W J
R1330	NRSA02J-472X	MG R	4.7kΩ 1/10W J
R1331	NRSA02J-333X	MG R	33kΩ 1/10W J
R1332-33	NRSA02J-222X	MG R	2.2kΩ 1/10W J
R1335	NRSA02J-273X	MG R	27kΩ 1/10W J
R1340-41	NRSA02J-333X	MG R	33kΩ 1/10W J
R1342	NRSA02J-152X	MG R	1.5kΩ 1/10W J
R1343	NRSA02J-272X	MG R	2.7kΩ 1/10W J
R1344	NRSA02J-471X	MG R	470Ω 1/10W J
R1345	NRSA02J-102X	MG R	1kΩ 1/10W J
R1346	NRSA02J-223X	MG R	22kΩ 1/10W J
R1401-02	NRSA02J-103X	MG R	10kΩ 1/10W J
R1403	NRSA02J-102X	MG R	1kΩ 1/10W J
R1404	NRSA02J-183X	MG R	18kΩ 1/10W J
R1405	NRSA02J-223X	MG R	22kΩ 1/10W J
R1409	NRSA02J-0R0X	MG R	0.0Ω 1/10W J
R1411	NRVA02D-473X	MF R	47kΩ 1/10W D
R1413	NRVA02D-223X	MF R	22kΩ 1/10W D
R1414	NRVA02D-101X	MF R	100Ω 1/10W D
R1415	NRSA02J-562X	MG R	5.6kΩ 1/10W J
R1416	NRSA02J-101X	MG R	100Ω 1/10W J
R1417	NRSA02J-223X	MG R	22kΩ 1/10W J
R1418	NRSA02J-682X	MG R	6.8kΩ 1/10W J
R1419	NRSA02J-562X	MG R	5.6kΩ 1/10W J
R1420	NRSA02J-183X	MG R	18kΩ 1/10W J
R1501	NRSA02J-621X	MG R	620Ω 1/10W J
R1502	NRSA02J-103X	MG R	10kΩ 1/10W J
R1503	NRSA02J-104X	MG R	100kΩ 1/10W J
R1504	NRSA02J-822X	MG R	8.2kΩ 1/10W J
R1505-06	NRSA02J-221X	MG R	220Ω 1/10W J
R1507	NRSA02J-102X	MG R	1kΩ 1/10W J
R1508-09	NRSA02J-223X	MG R	22kΩ 1/10W J
R1511	NRSA02J-0R0X	MG R	0.0Ω 1/10W J
R1514	NRSA02J-472X	MG R	4.7kΩ 1/10W J
R1516	NRSA02J-222X	MG R	2.2kΩ 1/10W J
R1517	NRSA02J-472X	MG R	4.7kΩ 1/10W J
R1518	NRSA02J-682X	MG R	6.8kΩ 1/10W J
R1519	NRSA02J-562X	MG R	5.6kΩ 1/10W J
R1520	NRSA02J-152X	MG R	1.5kΩ 1/10W J
R1571	NRSA02J-101X	MG R	100Ω 1/10W J
R1572	NRSA02J-133X	MG R	13kΩ 1/10W J
R1573	NRSA02J-821X	MG R	820Ω 1/10W J
R1608-09	NRSA02J-822X	MG R	8.2kΩ 1/10W J
R1610-11	NRSA02J-103X	MG R	10kΩ 1/10W J
R1633	NRSA02J-273X	MG R	27kΩ 1/10W J
R1635	NRSA02J-561X	MG R	560Ω 1/10W J
R1638	NRSA02J-473X	MG R	47kΩ 1/10W J
R1639	NRSA02J-103X	MG R	10kΩ 1/10W J
R1642	QRK126J-4R7X	C R	4.7Ω 1/2W J

⚠ Symbol No.	Part No.	Part Name	Description
RESISTOR			
R1644	NRSA02J-561X	MG R	560Ω 1/10W J
R1645	QRK126J-4R7X	C R	4.7Ω 1/2W J
R1648	NRSA02J-104X	MG R	100kΩ 1/10W J
R1690	QRG01GJ-270	OM R	27Ω 1W J
R1701	NRSA02J-221X	MG R	220Ω 1/10W J
R1703	NRSA02J-273X	MG R	27kΩ 1/10W J
R1704	NRSA02J-473X	MG R	47kΩ 1/10W J
R1705	NRSA02J-102X	MG R	1kΩ 1/10W J
R1706	NRSA02J-223X	MG R	22kΩ 1/10W J
R1707-10	NRSA02J-103X	MG R	10kΩ 1/10W J
R1713-14	NRSA02J-102X	MG R	1kΩ 1/10W J
R1716	NRSA02J-102X	MG R	1kΩ 1/10W J
R1717	NRSA02J-104X	MG R	100kΩ 1/10W J
R1718-19	NRSA02J-682X	MG R	6.8kΩ 1/10W J
R1720	NRSA02J-472X	MG R	4.7kΩ 1/10W J
R1722	NRSA02J-472X	MG R	4.7kΩ 1/10W J
R1724-25	NRSA02J-472X	MG R	4.7kΩ 1/10W J
R1727	NRSA02J-472X	MG R	4.7kΩ 1/10W J
R1729-31	NRSA02J-221X	MG R	220Ω 1/10W J
R1740	NRSA02J-331X	MG R	330Ω 1/10W J
R1743-44	NRSA02J-101X	MG R	100Ω 1/10W J
R1745	NRSA02J-472X	MG R	4.7kΩ 1/10W J
R1747	NRSA02J-472X	MG R	4.7kΩ 1/10W J
R1748-52	NRSA02J-221X	MG R	220Ω 1/10W J
R1753	NRSA02J-102X	MG R	1kΩ 1/10W J
R1755	NRSA02J-102X	MG R	1kΩ 1/10W J
R1756	NRSA02J-103X	MG R	10kΩ 1/10W J
R1759	NRSA02J-472X	MG R	4.7kΩ 1/10W J
R1763	NRSA02J-103X	MG R	10kΩ 1/10W J
R1764-66	NRSA02J-221X	MG R	220Ω 1/10W J
R1767	NRSA02J-103X	MG R	10kΩ 1/10W J
R1770	NRSA02J-272X	MG R	2.7kΩ 1/10W J
R1771-73	NRSA02J-222X	MG R	2.2kΩ 1/10W J
R1774-75	NRSA02J-333X	MG R	33kΩ 1/10W J
R1777-79	NRSA02J-222X	MG R	2.2kΩ 1/10W J
R1780	NRSA02J-102X	MG R	1kΩ 1/10W J
R1784-85	NRSA02J-223X	MG R	22kΩ 1/10W J
R1786	NRSA02J-473X	MG R	47kΩ 1/10W J
R1787	NRSA02J-332X	MG R	3.3kΩ 1/10W J
R1788	NRSA02J-272X	MG R	2.7kΩ 1/10W J
R1789	NRSA02J-473X	MG R	47kΩ 1/10W J
R1790	NRSA02J-682X	MG R	6.8kΩ 1/10W J
R1801	NRSA02J-333X	MG R	33kΩ 1/10W J
R1802	NRSA02J-222X	MG R	2.2kΩ 1/10W J
R1805	NRSA02J-332X	MG R	3.3kΩ 1/10W J
R1806	NRSA02J-184X	MG R	180kΩ 1/10W J
R1871	NRSA02J-102X	MG R	1kΩ 1/10W J
R1872-73	NRSA02J-222X	MG R	2.2kΩ 1/10W J
R1874	NRSA02J-272X	MG R	2.7kΩ 1/10W J
R1875	NRSA02J-104X	MG R	100kΩ 1/10W J
R1876	NRSA02J-102X	MG R	1kΩ 1/10W J
R1877	NRSA02J-393X	MG R	39kΩ 1/10W J
R1878-80	NRSA02J-152X	MG R	1.5kΩ 1/10W J
R1881-82	NRSA02J-331X	MG R	330Ω 1/10W J
R1883	NRSA02J-102X	MG R	1kΩ 1/10W J
R1884	NRSA02J-331X	MG R	330Ω 1/10W J
CAPACITOR			
C1001	NCB21HK-222X	C CAP.	2200pF 50V K
C1003	NCB21EK-104X	C CAP.	0.1μF 25V K
C1004	QETN1CM-108Z	E CAP.	1000μF 16V M
C1005	QETN1CM-107Z	E CAP.	100μF 16V M
C1006	QETN1HM-106Z	E CAP.	10μF 50V M
C1007	NCB21HK-104X	CHIP CAP.	0.1μF 50V K
C1008	QETN1HM-106Z	E CAP.	10μF 50V M
C1009	NCB21EK-104X	C CAP.	0.1μF 25V K
C1010	QETN1CM-107Z	E CAP.	100μF 16V M

⚠ Symbol No.	Part No.	Part Name	Description		
CAPACITOR					
C1301	NCB21EK-104X	C CAP.	0.1µF	25V	K
C1302	NCB21HK-823X	CHIP CAP.	0.082µF	50V	K
C1303	QETN1EM-476Z	E CAP.	47µF	25V	M
C1304	NCB21HK-103X	C CAP.	0.01µF	50V	K
C1305	QETN1CM-107Z	E CAP.	100µF	16V	M
C1306	NCB21HK-103X	C CAP.	0.01µF	50V	K
C1307	QETN1CM-477Z	E CAP.	470µF	16V	M
C1308	NDC21HJ-120X	C CAP.	12pF	50V	J
C1309	QETN1HM-475Z	E CAP.	4.7µF	50V	M
C1310	NCB21HK-103X	C CAP.	0.01µF	50V	K
C1311	QETN1HM-106Z	E CAP.	10µF	50V	M
C1312	NDC21HJ-680X	C CAP.	68pF	50V	J
C1313	QETN1CM-107Z	E CAP.	100µF	16V	M
C1314	NCB21HK-103X	C CAP.	0.01µF	50V	K
C1315	QETN1HM-106Z	E CAP.	10µF	50V	M
C1319	QETN1CM-107Z	E CAP.	100µF	16V	M
C1320	NCB21HK-103X	C CAP.	0.01µF	50V	K
C1321-23	NCB21EK-104X	C CAP.	0.1µF	25V	K
C1324-26	QETN1HM-105Z	E CAP.	1µF	50V	M
C1327	QETN1HM-475Z	E CAP.	4.7µF	50V	M
C1328	QETN1CM-107Z	E CAP.	100µF	16V	M
C1329	QETN1EM-476Z	E CAP.	47µF	25V	M
C1330	NDC21HJ-390X	C CAP.	39pF	50V	J
C1331	QETN1HM-105Z	E CAP.	1µF	50V	M
C1332	NCB21HK-103X	C CAP.	0.01µF	50V	K
C1333	NCB21EK-104X	C CAP.	0.1µF	25V	K
C1401	QETN1HM-105Z	E CAP.	1µF	50V	M
C1403-05	NCB21HK-103X	C CAP.	0.01µF	50V	K
C1406	QFV71HJ-184Z	MF CAP.	0.18µF	50V	J
C1407	QFV71HJ-824Z	MF CAP.	0.82µF	50V	J
C1408	NCB21HK-153X	C CAP.	0.015µF	50V	K
C1501	QETN1CM-107Z	E CAP.	100µF	16V	M
C1502-04	NCB21HK-103X	C CAP.	0.01µF	50V	K
C1505	NCB21HK-332X	C CAP.	3300pF	50V	K
C1506	QETN1HM-335Z	E CAP.	3.3µF	50V	M
C1507	NCB21HK-103X	C CAP.	0.01µF	50V	K
C1508	QETN1CM-108Z	E CAP.	1000µF	16V	M
C1509	NCB21HK-823X	CHIP CAP.	0.082µF	50V	K
C1510-11	NCB21HK-103X	C CAP.	0.01µF	50V	K
C1512	QTMN1HM-105Z	E CAP.	0.1µF	50V	M
C1513	QETM1CM-228	E CAP.	2200µF	16V	M
C1514	NCB21HK-103X	C CAP.	0.01µF	50V	K
C1515	QFV71HJ-394Z	MF CAP.	0.39µF	50V	J
C1516	NCB21HK-103X	C CAP.	0.01µF	50V	K
C1571	NCB21HK-103X	C CAP.	0.01µF	50V	K
C1605	QETN1HM-106Z	E CAP.	10µF	50V	M
C1606	QETN1EM-227Z	E CAP.	220µF	25V	M
C1622-23	QETN1CM-227Z	E CAP.	220µF	16V	M
C1624	QETN1EM-476Z	E CAP.	47µF	25V	M
C1626	QENC1EM-107Z	BP E CAP.	100µF	25V	M
C1627	QETM1EM-228	E CAP.	2200µF	25V	M
C1629	QENC1EM-107Z	BP E CAP.	100µF	25V	M
C1631	QETN1EM-476Z	E CAP.	47µF	25V	M
C1632	NCS21HJ-221X	C CAP.	220pF	50V	J
C1633-34	QFV71HJ-104Z	MF CAP.	0.1µF	50V	J
C1635-36	QETN1EM-108Z	E CAP.	1000µF	25V	M
C1637-38	QFV71HJ-104Z	MF CAP.	0.1µF	50V	J
C1639	QETN1HM-106Z	E CAP.	10µF	50V	M
C1640	NCS21HJ-221X	C CAP.	220pF	50V	J
C1641	QETN1HM-226Z	E CAP.	22µF	50V	M
C1668	NCB21EK-104X	C CAP.	0.1µF	25V	K
C1671	QETN1CM-107Z	E CAP.	100µF	16V	M
C1672	NCB21EK-104X	C CAP.	0.1µF	25V	K
C1701	NCF21CZ-105X	C CAP.	1µF	16V	Z
C1703	QETN1EM-476Z	E CAP.	47µF	25V	M
C1704	NCB21EK-104X	C CAP.	0.1µF	25V	K
C1705	QETN1AM-107Z	E CAP.	100µF	10V	M
C1706	NCB21EK-104X	C CAP.	0.1µF	25V	K
C1707	QETN1HM-474Z	E CAP.	0.47µF	50V	M
C1708	QETN1EM-476Z	E CAP.	47µF	25V	M
C1709-10	NDC21HJ-9R0X	C CAP.	9.0pF	50V	J
C1711	NCB21EK-104X	C CAP.	0.1µF	25V	K
C1712	NDC21HJ-151X	C CAP.	150pF	50V	J

⚠ Symbol No.	Part No.	Part Name	Description		
CAPACITOR					
C1716-17	QETN1HM-105Z	E CAP.	1µF	50V	M
C1718	NCB21HK-333X	C CAP.	0.033µF	50V	K
C1725	NCB21HK-102X	C CAP.	1000pF	50V	K
C1871	NCB21EK-104X	C CAP.	0.1µF	25V	K
C1872	NCB21HK-223X	C CAP.	0.022µF	50V	K
C1873	NDC21HJ-221X	C CAP.	220pF	50V	J
C1874-75	NDC21HJ-150X	C CAP.	15pF	50V	J
C1876	NCB21HK-102X	C CAP.	1000pF	50V	K
C1877	NCB21EK-104X	C CAP.	0.1µF	25V	K
C1878	NCB21HK-102X	C CAP.	1000pF	50V	K
C1879	NDC21HJ-180X	C CAP.	18pF	50V	J
C1880	QETN1AM-477Z	E CAP.	470µF	10V	M
C1881	NCB21EK-104X	C CAP.	0.1µF	25V	K
C1882	QETN1EM-476Z	E CAP.	47µF	25V	M
C1883	NCB21HK-103X	C CAP.	0.01µF	50V	K
C1884-85	NCB21EK-104X	C CAP.	0.1µF	25V	K
C1886	NCB21HK-103X	C CAP.	0.01µF	50V	K
C1887-89	QETN1HM-106Z	E CAP.	10µF	50V	M
COIL					
L1001	QQL244K-5R6Z	PEAKING COIL	5.6µH		
L1002	QQL244K-270Z	PEAKING COIL	27µH		
L1301-02	QQL244K-4R7Z	PEAKING COIL	4.7µH		
L1305	QQL244K-4R7Z	PEAKING COIL	4.7µH		
L1306	QQL244K-330Z	PEAKING COIL	33µH		
L1501	QQL244J-151Z	PEAKING COIL	150µH		
L1701	QQL244K-4R7Z	PEAKING COIL	4.7µH		
L1702	QQL244K-3R9Z	PEAKING COIL			
L1871	QQL244K-4R7Z	PEAKING COIL	4.7µH		
DIODE					
D1301	MA3051/M/-X	ZENER DIODE			
D1302-04	MA111-X	SI.DIODE			
D1503	RB100A-T2	SI.DIODE			
D1602	MA111-X	SI.DIODE			
D1608	MA111-X	SI.DIODE			
D1612	MA111-X	SI.DIODE			
D1624-25	MA111-X	SI.DIODE			
D1701	MA3068/M/-X	ZENER DIODE			
D1702	MA111-X	SI.DIODE			
D1704	MA111-X	SI.DIODE			
D1705	MA3036-X	ZENER DIODE			
D1706-08	MA111-X	SI.DIODE			
D1710	MA111-X	SI.DIODE			
TRANSISTOR					
Q1301-02	2SA1037AK/QR/-X	SI.TRANSISTOR			
Q1308	DTC124EKA-X	DIGI.TRANSISTOR			
Q1311	DTC124EKA-X	DIGI.TRANSISTOR			
Q1312	2SA1037AK/QR/-X	SI.TRANSISTOR			
Q1401	DTC124EKA-X	DIGI.TRANSISTOR			
Q1402	2SC2412K/QR/-X	SI.TRANSISTOR			
Q1604	2SA1037AK/QR/-X	SI.TRANSISTOR			
Q1609	2SA1037AK/QR/-X	SI.TRANSISTOR			
Q1610	DTC323TK-X	DIGI.TRANSISTOR			
Q1612	DTC323TK-X	DIGI.TRANSISTOR			
Q1701-04	2SC2412K/QR/-X	SI.TRANSISTOR			
Q1705	2SA1037AK/QR/-X	SI.TRANSISTOR			
Q1708	2SA1037AK/QR/-X	SI.TRANSISTOR			
Q1709-10	2SC2412K/QR/-X	SI.TRANSISTOR			
Q1871	2SA1037AK/QR/-X	SI.TRANSISTOR			
Q1872	2SC2412K/QR/-X	SI.TRANSISTOR			
IC					
IC1301	TB1227CN	I C			
IC1302	TC4053BP/N/	I.C.(DIGI-MOS)			
IC1501	AN5441SA-W	I C			
IC1601	LA4446	I.C.(MONO-ANA)			
IC1607	BA05T	I.C.(MONO-ANA)			
IC1701	M37280MK-207SP	I C			
IC1702	AT24C16-28WT5	I.C.	(SERVICE)		
IC1703	L78LR05E-MA	I.C.(MONO-ANA)			

⚠	Symbol No.	Part No.	Part Name	Description
	IC			
	IC1871	ET417	I.C.(M)	
	IC1872	ET206	I.C.(M)	
	OTHERS			
	CN1001	QGF1220C2-19	FFC/FPC CONNECTO	
	K1001	QQR0621-002Z	BEADS CORE	
	K1004	QQR0621-002Z	BEADS CORE	
	K1307	QQR0621-002Z	BEADS CORE	
	K1872	QQL244K-3R3Z	PEAKING COIL	
	LC1301	CE42142-222Z	EMI FILTER	
	TU1001	QAU0188-003	TUNER	
	X1301	QAX0305-001Z	CRYSTAL	
	X1701	CST8.00MTW	CER.RESONATOR	
	X1871	CE41257-001Z	CRYSTAL	

■ POWER & DEF. P.W. BOARD ASS'Y (SJK-2512A-U2)

⚠	Symbol No.	Part No.	Part Name	Description
	RESISTOR			
	R2401	QRE141J-682Y	C R	6.8kΩ 1/4W J
	R2402	QRA14CF-6801Y	MF R	6.8kΩ 1/4W F
	R2403	QRA14CF-1201Y	MF R	1.2kΩ 1/4W F
	R2404-05	QRA14CF-8200Y	MF R	820Ω 1/4W F
	R2406	QRE141J-103Y	C R	10kΩ 1/4W J
	R2409	QRE141J-103Y	C R	10kΩ 1/4W J
	R2410	QRE141J-102Y	C R	1kΩ 1/4W J
	R2414	QRE121J-3R9Y	C R	3.9Ω 1/2W J
	R2415	QRX01GJ-1R8	MF R	1.8Ω 1W J
	R2416	QRG01GJ-820	OM R	82Ω 1W J
	R2417	QRE121J-1R0Y	C R	1.0Ω 1/2W J
	R2461	QRE141J-331Y	C R	330Ω 1/4W J
	R2463	QRE121J-392Y	C R	3.9kΩ 1/2W J
	R2464	QRE121J-682Y	C R	6.8kΩ 1/2W J
	R2465	QRE121J-103Y	C R	10kΩ 1/2W J
	R2466	QRE121J-102Y	C R	1kΩ 1/2W J
	R2467	QRL039J-120	OM R	12Ω 3W J
	R2492	QRE141J-683Y	C R	68kΩ 1/4W J
	R2493	QRE141J-224Y	C R	220kΩ 1/4W J
	R2495	QRE141J-103Y	C R	10kΩ 1/4W J
	R2496	QRE141J-183Y	C R	18kΩ 1/4W J
	R2497	QRE141J-153Y	C R	15kΩ 1/4W J
	R2502	QRE141J-222Y	C R	2.2kΩ 1/4W J
	R2503	QRE121J-152Y	C R	1.5kΩ 1/2W J
	R2504	QRL039J-821	OM R	820Ω 3W J
	R2505	QRL039J-681	OM R	680Ω 3W J
	R2521	QRE121J-150Y	C R	15Ω 1/2W J
	R2522	QRL039J-103	OM R	10kΩ 3W J
	R2523	QRE121J-471Y	C R	470Ω 1/2W J
	R2525	QRE141J-332Y	C R	3.3kΩ 1/4W J
	R2541	QRE121J-103Y	C R	10kΩ 1/2W J
	R2542	QRE121J-222Y	C R	2.2kΩ 1/2W J
	R2543	QRE121J-124Y	C R	120kΩ 1/2W J
	R2544	QRE121J-104Y	C R	100kΩ 1/2W J
	R2545	QRE141J-123Y	C R	12kΩ 1/4W J
	R2546	QRE121J-104Y	C R	100kΩ 1/2W J
	R2547	QRE141J-123Y	C R	12kΩ 1/4W J
	R2548	QRE121J-222Y	C R	2.2kΩ 1/2W J
	R2551-52	QRT039J-1R0	MF R	1.0Ω 3W J
	R2553	QRF104K-5R6	UNF R	5.6Ω 10W K
	R2591	QRE121J-123Y	C R	12kΩ 1/2W J
	R2592	QRA14CF-1201Y	MF R	1.2kΩ 1/4W F
	R2593	QRE141J-183Y	C R	18kΩ 1/4W J
	R2594	QRE141J-222Y	C R	2.2kΩ 1/4W J
⚠	R2595	QRA14CF-1692Y	MF R	16.9kΩ 1/4W F
⚠	R2596	QRA14CF-2491Y	MF R	2.49kΩ 1/4W F
	R2597	QRE141J-273Y	C R	27kΩ 1/4W J
⚠	R2902	QRZ0123-121	UNF R	120 Ω 7W J

⚠	Symbol No.	Part No.	Part Name	Description
	RESISTOR			
	R2903	QRF104K-3R9	UNF R	3.9Ω 10W K
	R2904-05	QRE121J-474Y	C R	470kΩ 1/2W J
	R2907-08	QRL039J-823	OM R	82kΩ 3W J
	R2909	QRG039J-683	OM R	68kΩ 3W J
	R2910	QRE121J-681Y	C R	680Ω 1/2W J
	R2911	QRM059J-R15	MP R	0.15Ω 5W J
	R2912	QRT029J-2R2	MF R	2.2Ω 2W J
	R2914	QRE121J-272Y	C R	2.7kΩ 1/2W J
	R2918	QRE121J-332Y	C R	3.3kΩ 1/2W J
	R2933	QRE141J-102Y	C R	1kΩ 1/4W J
	R2935	QRE141J-473Y	C R	47kΩ 1/4W J
	R2936	QRE141J-103Y	C R	10kΩ 1/4W J
	R2938	QRE121J-102Y	C R	1kΩ 1/2W J
	R2940	QRE121J-390Y	C R	39Ω 1/2W J
	R2964	QRE121J-102Y	C R	1kΩ 1/2W J
	R2967	QRL039J-223	OM R	22kΩ 3W J
	R2976	QRL029J-100	OM R	10Ω 2W J
⚠	R2991	QRZ9041-825	C R	8.2MΩ 1/2W K
	CAPACITOR			
	C2401	QEHR1VM-227Z	E CAP.	220μF 35V M
	C2402	QETM1VM-108	E CAP.	1000μF 35V M
	C2403	QFLC2AJ-683Z	M CAP.	0.068μF 100V J
	C2404	QETN1HM-105Z	E CAP.	1μF 50V M
	C2405	QFLC1HJ-472Z	M CAP.	4700pF 50V J
	C2406	QCZ0337-180Z	C CAP.	18pF 2kV J
	C2407	QFLC1HJ-102Z	M CAP.	1000pF 50V J
	C2408	QFV71HJ-334Z	MF CAP.	0.33μF 50V J
	C2410	QFV71HJ-334Z	MF CAP.	0.33μF 50V J
	C2411	QFLC2AJ-563Z	M CAP.	0.056μF 100V J
	C2451	QFV71HJ-104Z	MF CAP.	0.1μF 50V J
	C2461	QEZ0231-475Z	E CAP.	4.7μF 160V M
	C2462	QETN1HM-106Z	E CAP.	10μF 50V M
	C2463	QFLC1HJ-153Z	M CAP.	0.015μF 50V J
	C2491	QETN1HM-105Z	E CAP.	1μF 50V M
	C2492	QETN1HM-106Z	E CAP.	10μF 50V M
	C2502	QCB32HK-681Z	C CAP.	680pF 500V K
	C2503	QEHR2CM-105Z	E CAP.	1μF 160V M
⚠	C2521	QFZ0200-722	MPP CAP.	7200pF1.5kVH ±3%
⚠	C2522	QFZ0200-113	MPP CAP.	0.011μF1.5kVH ±3%
⚠	C2523	QFP32GJ-223	PP CAP.	0.022μF 400V J
⚠	C2524	QFM72DK-683	M CAP.	0.068μF 200V K
⚠	C2525	QFZ0197-354	MPP CAP.	0.35μF 250V J
⚠	C2526	QFZ0197-514	MPP CAP.	0.51μF 250V J
	C2527	QEHR2EM-475Z	E CAP.	4.7μF 250V M
	C2528	QFZ0197-683	MPP CAP.	0.068μF 250V J
	C2529	QFZ0197-104	MPP CAP.	0.1μF 250V J
	C2530	QCB32HK-561Z	C CAP.	560pF 500V K
	C2531	QFLC1HJ-103Z	M CAP.	0.01μF 50V J
	C2532	QFZ0197-374	MPP CAP.	0.37μF 250V J
	C2542	QFZ0197-824	MPP CAP.	0.82μF 250V J
	C2543	QFZ0197-204	MPP CAP.	0.2μF 250V J
	C2551	QETN2EM-106Z	E CAP.	10μF 250V M
	C2552	QCB32HK-152Z	C CAP.	1500pF 500V K
	C2553	QEHR1EM-108Z	E CAP.	1000μF 25V M
	C2554	QCB32HK-152Z	C CAP.	1500pF 500V K
	C2555	QEHR1EM-108Z	E CAP.	1000μF 25V M
	C2560	QETM2CM-227	E CAP.	220μF 160V M
	C2591	QETN1AM-107Z	E CAP.	100μF 10V M
	C2592	QETN1EM-476Z	E CAP.	47μF 25V M
	C2593	QETN2AM-106Z	E CAP.	10μF 100V M
	C2594	QETN1AM-227Z	E CAP.	220μF 10V M
⚠	C2904	QCZ9054-472	C CAP.	4700pFAC250V Z
⚠	C2905	QCZ9054-472	C CAP.	4700pFAC250V Z
⚠	C2906	QCZ9054-472	C CAP.	4700pFAC250V M
	C2907	QEZ0199-227	E CAP.	220μF 400V M
	C2908	QCB32HK-103	C CAP.	0.01μF 500V K
	C2909	QCZ0122-391	C CAP.	390pF 2kV K
	C2910	QCZ0122-102	C CAP.	1000pF 2kV K
	C2912	QCB31HK-471Z	C CAP.	470pF 50V K
	C2913	QETN1HM-476Z	E CAP.	47μF 50V M
	C2916	QETN1HM-107Z	E CAP.	100μF 50V M
	C2918	QCB31HK-681Z	C CAP.	680pF 50V K

CAPACITOR

⚠	Symbol No.	Part No.	Part Name	Description
	C2933-34	QETN1HM-106Z	E CAP.	10µF 50V M
	C2935	QETN1EM-227Z	E CAP.	220µF 25V M
	C2951	QCZ0122-561	C CAP.	560pF 2kV K
	C2952	QEZ0203-227	E CAP.	220µF 160V M
	C2953	QCB32HK-391Z	C CAP.	390pF 500V K
	C2954	QTMM1EM-228	E CAP.	2200µF 25V M
	C2955	QCB32HK-391Z	C CAP.	390pF 500V K
	C2956	QTMM1CM-228	E CAP.	2200µF 16V M
	C2958	QCB32HK-391Z	C CAP.	390pF 500V K
	C2959	QETM1VM-228	E CAP.	2200µF 35V M
	C2964	QFV71HJ-684Z	MF CAP.	0.68µF 50V J
	C2968	QCZ0120-104Z	C CAP.	0.1µF 25V Z
	C2969	QEHR1CM-477Z	E CAP.	470µF 16V M
	C2970	QEHR1CM-107Z	E CAP.	100µF 16V M
	C2971	QCZ0120-104Z	C CAP.	0.1µF 25V Z
	C2972	QETN1CM-227Z	E CAP.	220µF 16V M
	C2973	QETN1EM-476Z	E CAP.	47µF 25V M
	C2974	QCZ0120-104Z	C CAP.	0.1µF 25V Z
	C2975	QETN1AM-227Z	E CAP.	220µF 10V M
	C2976	QETN1EM-476Z	E CAP.	47µF 25V M
	C2979	QFV71HJ-104Z	MF CAP.	0.1µF 50V J
⚠	C2991	QCZ9079-332	C CAP.	3300pFAC250V M
⚠	C2992	QCZ9079-471	C CAP.	470pFAC250V K

TRANSFORMER

⚠	Symbol No.	Part No.	Part Name
	T2501	CE42034-002	H.DRIVE TRANSF.
	T2521	CE42549-001J1	BRIGE COIL
⚠	T2551	QQH0093-001	FB TRANSF.
⚠	T2901	QQS0099-001	SW TRANSF.
⚠	T2921	QQT0303-001	POWER TRANSF.

COIL

⚠	Symbol No.	Part No.	Part Name	Description
	L2461	QQLZ028-472	CHOKE COIL	
	L2521	QQLZ028-101	CHOKE COIL	
	L2522	QQR1137-004	LINEARITY COIL	
	L2901-02	QQL402K-100	COIL	10µH
⚠	L2903	QQR0659-004	CHOKE COIL	
	L2951	QQLZ026-460	HEATER CHOKE	
	L2952	QQL26AK-820Z	CHOKE COIL	
	L2953-54	QQL26AM-5R6Z	CHOKE COIL	

DIODE

⚠	Symbol No.	Part No.	Part Name
	D2401	MTZJ75-T2	ZENER DIODE
	D2402	1N4003-T2	SI.DIODE
	D2403	1SS133-T2	SI.DIODE
	D2451	BYD33D-T3	SI.DIODE
	D2491	BYD33D-T3	SI.DIODE
	D2492	MTZJ22B-T2	ZENER DIODE
	D2493-94	1SS133-T2	SI.DIODE
	D2521	RH3G-F1	SI.DIODE
	D2522	BYW95B-20	SI.DIODE
	D2523	BYD33G-T3	SI.DIODE
	D2525	MTZJ9.1B-T2	ZENER DIODE
	D2551	BYD33G-T3	SI.DIODE
	D2553-54	BYW95B-20	SI.DIODE
	D2591	MTZJ15B-T2	ZENER DIODE
	D2592	MTZJ7.5B-T2	ZENER DIODE
	D2593	BYD33D-T3	SI.DIODE
	D2594	MTZJ7.5S-T2	ZENER DIODE
⚠	D2901	D3SBA60	DIODE BRIDGE
	D2902	BYD33M-T3	SI.DIODE
	D2904-05	BYD33D-T3	SI.DIODE
	D2909	1SS133-T2	SI.DIODE
	D2911	MTZJ15B-T2	ZENER DIODE
	D2913	MTZJ27B-T2	ZENER DIODE
	D2931	1SS133-T2	SI.DIODE
	D2934	MTZJ6.2B-T2	ZENER DIODE
	D2935-38	1N4003-T2	SI.DIODE
	D2939	1SS133-T2	SI.DIODE
	D2951	RU4B-F1	SI.DIODE
	D2953-54	BYW95B-20	SI.DIODE
	D2955	FMX-G12S	SI.DIODE
	D2958	1SR35-400A-T2	SI.DIODE
	D2963	MTZJ3.9B-T2	ZENER DIODE

DIODE

⚠	Symbol No.	Part No.	Part Name
	D2964	MTZJ33B-T2	ZENER DIODE
	D2981-83	1SS133-T2	SI.DIODE
	D2985	MTZJ7.5C-T2	ZENER DIODE

TRANSISTOR

⚠	Symbol No.	Part No.	Part Name	Description
	Q2402	2SC1740S/QR/-T	SI.TRANSISTOR	
	Q2461	2SD1408/OY/-LB	SI.TRANSISTOR	
	Q2462-63	2SA933AS/QR/-T	SI.TRANSISTOR	
	Q2501	BSN304-T	F.E.T.	
⚠	Q2521	2SD2634-YD	SI.TRANSISTOR	H.OUT
	Q2541-42	DTC124ESA-T	DIGI.TRANSISTOR	
	Q2543	IRF620	F.E.T.	
	Q2544-45	2SK2459N-F54	F.E.T.	
	Q2546	DTC124ESA-T	DIGI.TRANSISTOR	
	Q2591	2SA949/Y/Z1-T	SI.TRANSISTOR	
	Q2592	DTC124ESA-T	DIGI.TRANSISTOR	
	Q2593	2SC1740S/QR/-T	SI.TRANSISTOR	
	Q2931-32	2SC1740S/QR/-T	SI.TRANSISTOR	
	Q2933	2SC2655/Y/-T	SI.TRANSISTOR	

IC

⚠	Symbol No.	Part No.	Part Name
	IC2401	LA7841	I.C.(MONO-ANA)
⚠	IC2901	STR-F6667B/F7	I C
	IC2951	SE140N	I.C.(HYBRID)
	IC2952	BA12T	I.C.(MONO-ANA)
	IC2953	BA17809T	I.C.(MONO-ANA)
	IC2954	BA05T	I.C.(MONO-ANA)

OTHERS

⚠	Symbol No.	Part No.	Part Name	Description
⚠	CP2952	ICP-N50-Y	I.C.PROTECT	
⚠	CP2953	ICP-N75-Y	I.C.PROTECT	
⚠	CP2956	ICP-N10-Y	I.C.PROTECT	
⚠	CP2957	ICP-N5-Y	I.C.PROTECT	
	K2401	QQR0621-002Z	BEADS CORE	
	K2503-04	QQR0582-001Z	BEADS CORE	
	K2901	QQR0679-001	FERRITE BEADS	
	K2904	QQR0679-001	FERRITE BEADS	
	K2951	QQR0872-001Y	FERRITE BEADS	
	K2952-54	QQR0621-002Z	BEADS CORE	
⚠	LF2901	QQR1095-001	LINE FILTER	
	PC2541-42	PC123F2	I.C.(PH.COUPLER)	
⚠	PC2901	PC123FY2	I.C.(PH.COUPLER)	
⚠	R2494	QRZ9017-4R7	F R	4.7Ω 1/4W J
⚠	R2524	QRZ9017-4R7	F R	4.7Ω 1/4W J
⚠	R2554	QRZ9021-1R0	F R	1.0Ω 1W J
⚠	R2555	QRZ9011-4R7	F R	4.7Ω 1/2W J
⚠	R2913	QRZ9017-100	F R	10Ω 1/4W J
⚠	RY2931	QSK0099-001	RELAY	
⚠	TH2901	QAD0120-9R0	P THERMISTOR	

■ CRT SOCKET P.W. BOARD ASS'Y (SJK-3512A-U2)

⚠	Symbol No.	Part No.	Part Name	Description
	RESISTOR			
	R3101-03	NRSA02J-101X	MG R	100Ω 1/10W J
	R3107-09	NRSA02J-392X	MG R	3.9kΩ 1/10W J
	R3110-12	NRSA02J-221X	MG R	220Ω 1/10W J
	R3113-15	NRSA02J-470X	MG R	47Ω 1/10W J
	R3116-18	QRL029J-153	OM R	15kΩ 2W J
	R3119-21	QRL029J-183	OM R	18kΩ 2W J
	R3125-27	QRZ0107-102Z	C R	1kΩ 1/2W K
	R3130	QRG01GJ-101	OM R	100Ω 1W J
	R3135	QRZ0107-474Z	C R	470kΩ 1/2W K
	R3136	QRE121J-474Y	C R	470kΩ 1/2W J
	R3137	QRZ0107-102Z	C R	1kΩ 1/2W K
	R3138	QRE121J-105Y	C R	1MΩ 1/2W J
	R3151	NRSA02J-102X	MG R	1kΩ 1/10W J
	R3152	NRSA02J-472X	MG R	4.7kΩ 1/10W J
	R3154	NRSA02J-0R0X	MG R	0.0Ω 1/10W J
	CAPACITOR			
	C3101-03	NDC21HJ-391X	C CAP.	390pF 50V J
	C3104	QETN1CM-107Z	E CAP.	100μF 16V M
	C3105	QETN1EM-476Z	E CAP.	47μF 25V M
	C3107	QETN1HM-106Z	E CAP.	10μF 50V M
	C3113	QCZ0131-222	C CAP.	2200pF 2000V K
	C3114	QETM2EM-336	E CAP.	33μF 250V M
	C3115	QETM2EM-106	E CAP.	10μF 250V M
	C3116	NRSA02J-0R0X	MG R	0.0Ω 1/10W J
	DIODE			
	D3151	MA111-X	SI.DIODE	
	D3153-55	MA111-X	SI.DIODE	
	D3156	MA3047/H/-X	ZENER DIODE	
	D3163	MA3150/M/-X	ZENER DIODE	
	D3164	1SR35-400A-T2	SI.DIODE	
	TRANSISTOR			
	Q3101-03	2SC1740S/QR/-T	SI.TRANSISTOR	
	Q3104-06	2SC4544-LB	SI.TRANSISTOR	
	Q3151	2SA1037AK/QR/-X	SI.TRANSISTOR	
	Q3152	2SC4682-T	SI.TRANSISTOR	
	OTHERS			
	K3101	QQR0621-002Z	BEADS CORE	
⚠	SK3001	CE42446-001	C.R.T.SOCKET	

■ FRONT CONTROL P.W. BOARD ASS'Y (SJK-8512A-U2)

⚠	Symbol No.	Part No.	Part Name	Description
	RESISTOR			
	R8301	NRSA02J-750X	MG R	75Ω 1/10W J
	R8801-02	NRSA02J-561X	MG R	560Ω 1/10W J
	R8807-09	NRSA02J-103X	MG R	10kΩ 1/10W J
	R8810-11	QRE121J-271Y	C R	270Ω 1/2W J
	R8812-13	NRSA02J-102X	MG R	1kΩ 1/10W J
	R8851	NRSA02J-682X	MG R	6.8kΩ 1/10W J
	R8861	NRSA02J-562X	MG R	5.6kΩ 1/10W J
	R8863	NRSA02J-472X	MG R	4.7kΩ 1/10W J
	R8864	NRSA02J-222X	MG R	2.2kΩ 1/10W J
	CAPACITOR			
	C8001	NCF21CZ-105X	C CAP.	1μF 16V Z
	C8301-02	NCB21HK-472X	C CAP.	4700pF 50V K
	C8303	NCB21HK-102X	C CAP.	1000pF 50V K
	C8801-02	NCB21HK-104X	CHIP CAP.	0.1μF 50V K
	C8805	NCB21HK-103X	C CAP.	0.01μF 50V K
	C8851	NCB21EK-104X	C CAP.	0.1μF 25V K
	C8852	QETN1CM-107Z	E CAP.	100μF 16V M
	C8861	QETN1HM-106Z	E CAP.	10μF 50V M
⚠	C8901	QFZ9040-474	MF CAP.	0.47μFAC275V M
	COIL			
	L8301	QQL244K-270Z	PEAKING COIL	27μH
	L8302	QQR0716-001Z	LEAD CORE	
	L8303	QQL244K-270Z	PEAKING COIL	27μH
	L8801-02	QQL244K-5R6Z	PEAKING COIL	5.6μH
	L8803	QQR0716-001Z	LEAD CORE	
	DIODE			
	D8801	SPR-39MVWF	L.E.D.	
	D8805	MA111-X	SI.DIODE	
	D8851	MA3068/M/-X	ZENER DIODE	
	D8861	MA111-X	SI.DIODE	
	D8862	P1241-04	C.D.S.	
	TRANSISTOR			
	Q8801-02	DTA124EKA-X	DIGI.TRANSISTOR	
	Q8861	2SA1037AK/QR/-X	SI.TRANSISTOR	
	IC			
	IC8851	GP1U281Q	IFR DETECT UNIT	
	OTHERS			
		LC30349-001A-H	L.E.D.HOLDER	
		CM35921-005-H	CDS HOLDER	
		CEMG002-001Z	FUSE CLIP	
⚠	F8901	QMF51D2-3R15J1	FUSE	3.15A
	J8301	QND0073-001	S JACK	
	J8302	QNN0370-001	PIN JACK	
	J8801	QMS3004-C01	HEADPHONE JACK	
⚠	LF8901	QQR1095-001	LINE FILTER	
	S8801	QSW0619-003Z	PUSH SWITCH	VR
	S8802	QSW0619-003Z	PUSH SWITCH	∇(DOWN)
	S8803	QSW0619-003Z	PUSH SWITCH	Δ(UP)
⚠	S8901	QSW0824-001	PUSH SWITCH	MAIN POWER

■AV SEL. P.W. BOARD ASS'Y (SJK0S712A-U2)

RESISTOR

⚠ Symbol No.	Part No.	Part Name	Description
R0101-08	NRSA02J-750X	MG R	75Ω 1/10W J
R0110	NRSA02J-823X	MG R	82kΩ 1/10W J
R0112	NRSA02J-823X	MG R	82kΩ 1/10W J
R0113	NRSA02J-750X	MG R	75Ω 1/10W J
R0114	NRSA02J-473X	MG R	47kΩ 1/10W J
R0115-16	NRSA02J-223X	MG R	22kΩ 1/10W J
R0117-18	NRSA02J-823X	MG R	82kΩ 1/10W J
R0119-20	NRSA02J-391X	MG R	390Ω 1/10W J
R0123	NRSA02J-104X	MG R	100kΩ 1/10W J
R0124-25	NRSA02J-101X	MG R	100Ω 1/10W J
R0126	NRSA02J-333X	MG R	33kΩ 1/10W J
R0127	NRSA02J-101X	MG R	100Ω 1/10W J
R0128	NRSA02J-103X	MG R	10kΩ 1/10W J
R0129	NRSA02J-823X	MG R	82kΩ 1/10W J
R0130	NRSA02J-473X	MG R	47kΩ 1/10W J
R0131	NRSA02J-273X	MG R	27kΩ 1/10W J
R0132	NRSA02J-153X	MG R	15kΩ 1/10W J
R0133	NRSA02J-222X	MG R	2.2kΩ 1/10W J
R0134	NRSA02J-333X	MG R	33kΩ 1/10W J
R0135	NRSA02J-222X	MG R	2.2kΩ 1/10W J
R0136-37	NRSA02J-333X	MG R	33kΩ 1/10W J
R0138	NRSA02J-473X	MG R	47kΩ 1/10W J
R0139	NRSA02J-823X	MG R	82kΩ 1/10W J
R0140	NRSA02J-103X	MG R	10kΩ 1/10W J
R0141	NRSA02J-153X	MG R	15kΩ 1/10W J
R0142	NRSA02J-223X	MG R	22kΩ 1/10W J
R0143	NRSA02J-473X	MG R	47kΩ 1/10W J
R0144	NRSA02J-273X	MG R	27kΩ 1/10W J
R0146	NRSA02J-391X	MG R	390Ω 1/10W J
R0148	NRSA02J-391X	MG R	390Ω 1/10W J
R0151	NRSA02J-104X	MG R	100kΩ 1/10W J
R0152	NRSA02J-222X	MG R	2.2kΩ 1/10W J
R0153	NRSA02J-333X	MG R	33kΩ 1/10W J
R0154	NRSA02J-222X	MG R	2.2kΩ 1/10W J
R0155	NRSA02J-333X	MG R	33kΩ 1/10W J
R0156-69	NRSA02J-101X	MG R	100Ω 1/10W J
R0170	NRSA02J-333X	MG R	33kΩ 1/10W J
R0171	NRSA02J-222X	MG R	2.2kΩ 1/10W J
R0172	NRSA02J-473X	MG R	47kΩ 1/10W J
R0173	NRSA02J-823X	MG R	82kΩ 1/10W J
R0174	NRSA02J-103X	MG R	10kΩ 1/10W J
R0175	NRSA02J-153X	MG R	15kΩ 1/10W J
R0176	NRSA02J-473X	MG R	47kΩ 1/10W J
R0177	NRSA02J-273X	MG R	27kΩ 1/10W J
R0180-83	NRSA02J-101X	MG R	100Ω 1/10W J
R0184	NRSA02J-333X	MG R	33kΩ 1/10W J
R0185	NRSA02J-222X	MG R	2.2kΩ 1/10W J
R0186	NRSA02J-333X	MG R	33kΩ 1/10W J
R0188	NRSA02J-101X	MG R	100Ω 1/10W J
R0189-90	NRSA02J-221X	MG R	220Ω 1/10W J
R0191-92	NRSA02J-562X	MG R	5.6kΩ 1/10W J
R0193-94	NRSA02J-102X	MG R	1kΩ 1/10W J
R0195	QRG01GJ-101	OM R	100Ω 1W J
R0197	QRK126J-181X	C R	180Ω 1/2W J
R0198	NRSA02J-750X	MG R	75Ω 1/10W J
R0199	NRSA02J-101X	MG R	100Ω 1/10W J
R0202	QRK126J-151X	C R	150Ω 1/2W J
R0203-05	NRSA02J-750X	MG R	75Ω 1/10W J
R0207	NRSA02J-222X	MG R	2.2kΩ 1/10W J
R0208	NRSA02J-333X	MG R	33kΩ 1/10W J
R0209	NRSA02J-222X	MG R	2.2kΩ 1/10W J
R0210	NRSA02J-333X	MG R	33kΩ 1/10W J
R0211-12	NRSA02J-103X	MG R	10kΩ 1/10W J
R0603	NRSA02J-102X	MG R	1kΩ 1/10W J
R0606	QRG01GJ-181	OM R	180Ω 1W J
R0607	NRSA02J-123X	MG R	12kΩ 1/10W J
R0608	NRSA02J-181X	MG R	180Ω 1/10W J
R0609	NRSA02J-123X	MG R	12kΩ 1/10W J
R0610	NRSA02J-122X	MG R	1.2kΩ 1/10W J
R0614	NRSA02J-103X	MG R	10kΩ 1/10W J
R0615	NRSA02J-101X	MG R	100Ω 1/10W J
R0617	NRSA02J-102X	MG R	1kΩ 1/10W J
R0618	NRSA02J-332X	MG R	3.3kΩ 1/10W J

RESISTOR

⚠ Symbol No.	Part No.	Part Name	Description
R0620	NRSA02J-333X	MG R	33kΩ 1/10W J
R0622	NRSA02J-103X	MG R	10kΩ 1/10W J
R0623	NRSA02J-102X	MG R	1kΩ 1/10W J
R0624	NRSA02J-104X	MG R	100kΩ 1/10W J
R0628	NRSA02J-0R0X	MG R	0.0Ω 1/10W J
R0629-31	NRSA02J-101X	MG R	100Ω 1/10W J
R0632	NRSA02J-332X	MG R	3.3kΩ 1/10W J
R0633	NRSA02J-221X	MG R	220Ω 1/10W J
R0634-35	NRSA02J-332X	MG R	3.3kΩ 1/10W J
R0647-48	NRSA02J-101X	MG R	100Ω 1/10W J
R0651	NRSA02J-122X	MG R	1.2kΩ 1/10W J

CAPACITOR

⚠ Symbol No.	Part No.	Part Name	Description
C0101	NDC21HJ-151X	C CAP.	150pF 50V J
C0102	QETN1CM-477Z	E CAP.	470μF 16V M
C0103-05	QETN1HM-106Z	E CAP.	10μF 50V M
C0106	NCB21HK-472X	C CAP.	4700pF 50V K
C0107	NCB21HK-152X	C CAP.	1500pF 50V K
C0108	NCB21HK-472X	C CAP.	4700pF 50V K
C0109	NCB21HK-152X	C CAP.	1500pF 50V K
C0110	QETN1CM-477Z	E CAP.	470μF 16V M
C0111-12	NCB21HK-472X	C CAP.	4700pF 50V K
C0113	NDC21HJ-151X	C CAP.	150pF 50V J
C0114-15	NCB21HK-472X	C CAP.	4700pF 50V K
C0116-17	QETN1HM-106Z	E CAP.	10μF 50V M
C0118	NCB21HK-102X	C CAP.	1000pF 50V K
C0119	QETN1HM-105Z	E CAP.	1μF 50V M
C0120	QETN1HM-106Z	E CAP.	10μF 50V M
C0121	QETN1HM-105Z	E CAP.	1μF 50V M
C0122	NCB21HK-103X	C CAP.	0.01μF 50V K
C0123	NCB21HK-102X	C CAP.	1000pF 50V K
C0124-25	QETN1HM-106Z	E CAP.	10μF 50V M
C0126	QETN1HM-105Z	E CAP.	1μF 50V M
C0127	QETN1HM-106Z	E CAP.	10μF 50V M
C0128	QETN1HM-105Z	E CAP.	1μF 50V M
C0129	QETN1HM-106Z	E CAP.	10μF 50V M
C0130	QETN1HM-105Z	E CAP.	1μF 50V M
C0131	NCB21HK-102X	C CAP.	1000pF 50V K
C0132	QETN1HM-105Z	E CAP.	1μF 50V M
C0133	NCB21HK-103X	C CAP.	0.01μF 50V K
C0136	QETN1HM-106Z	E CAP.	10μF 50V M
C0137	QENC1EM-106Z	BP E CAP.	10μF 25V M
C0139	QENC1EM-106Z	BP E CAP.	10μF 25V M
C0140	QETN1CM-107Z	E CAP.	100μF 16V M
C0141	NCB21HK-103X	C CAP.	0.01μF 50V K
C0142	QENC1HM-105Z	BP E CAP.	1μF 50V M
C0143	QENC1EM-106Z	BP E CAP.	10μF 25V M
C0144	QENC1HM-105Z	BP E CAP.	1μF 50V M
C0145-46	QETN1CM-107Z	E CAP.	100μF 16V M
C0147	QETN1CM-477Z	E CAP.	470μF 16V M
C0149	NCB21HK-103X	C CAP.	0.01μF 50V K
C0150-51	QETN1HM-106Z	E CAP.	10μF 50V M
C0152-53	QETN1HM-105Z	E CAP.	1μF 50V M
C0154-55	NDC21HJ-680X	C CAP.	68pF 50V J
C0157-58	NDC21HJ-680X	C CAP.	68pF 50V J
C0159	NDC21HJ-561X	C CAP.	560pF 50V J
C0160	NDC21HJ-102X	C CAP.	1000pF 50V J
C0161	NDC21HJ-680X	C CAP.	68pF 50V J
C0610	NDC21HJ-821X	C CAP.	820pF 50V J
C0611-12	NDC21HJ-470X	C CAP.	47pF 50V J
C0614	NDC21HJ-180X	C CAP.	18pF 50V J
C0616	QETN1CM-107Z	E CAP.	100μF 16V M
C0617	NCB21EK-104X	C CAP.	0.1μF 25V K
C0618	QETN1HM-106Z	E CAP.	10μF 50V M
C0619	NCB21EK-104X	C CAP.	0.1μF 25V K
C0620	QETN1HM-106Z	E CAP.	10μF 50V M
C0621-22	QENC1HM-105Z	BP E CAP.	1μF 50V M
C0623	NCB21EK-104X	C CAP.	0.1μF 25V K
C0624	QETN1HM-106Z	E CAP.	10μF 50V M
C0625	QETN1CM-227Z	E CAP.	220μF 16V M
C0626	NCB21HK-153X	C CAP.	0.015μF 50V K
C0627	QENC1HM-105Z	BP E CAP.	1μF 50V M
C0628	NCB21HK-223X	C CAP.	0.022μF 50V K
C0629	QETN1HM-106Z	E CAP.	10μF 50V M

⚠ Symbol No.	Part No.	Part Name	Description		
CAPACITOR					
C0630-31	NCB21HK-102X	C CAP.	1000pF	50V	K
C0632	NCB21EK-104X	C CAP.	0.1μF	25V	K
C0633	QETN1HM-106Z	E CAP.	10μF	50V	M
C0634-35	NCB21HK-103X	C CAP.	0.01μF	50V	K
C0636	NDC21HJ-2R0X	C CAP.	2.0pF	50V	J
C0637	NCB21HK-222X	C CAP.	2200pF	50V	K
C0638	QETN1CM-336Z	E CAP.	33μF	16V	M
C0639	NCB21HK-153X	C CAP.	0.015μF	50V	K
C0640	NCB21HK-223X	C CAP.	0.022μF	50V	K
C0641	NCB21HK-222X	C CAP.	2200pF	50V	K
C0642	NDC21HJ-2R0X	C CAP.	2.0pF	50V	J
C0643	QENC1HM-105Z	BP E CAP.	1μF	50V	M
C0645	NCB21HK-103X	C CAP.	0.01μF	50V	K
C0646	NCB21EK-104X	C CAP.	0.1μF	25V	K
C0647	QETN1CM-107Z	E CAP.	100μF	16V	M
C0648	NCB21EK-104X	C CAP.	0.1μF	25V	K
C0659-60	QENC1HM-105Z	BP E CAP.	1μF	50V	M
C0677-78	NCB21HK-102X	C CAP.	1000pF	50V	K
COIL					
L0114	QQR0716-001Z	LEAD CORE			
L0601	QQL244K-220Z	PEAKING COIL	22μH		
L0602	QQL244K-180Z	PEAKING COIL	18μH		
L0604	QQL244K-100Z	PEAKING COIL	10μH		
L0605	QQL244K-4R7Z	PEAKING COIL	4.7μH		
DIODE					
D0101-13	MA3120/M/-X	ZENER DIODE			
D0601	RD8.2E/B2/-T2	ZENER DIODE			
TRANSISTOR					
Q0101	DTC323TK-X	DIGI.TRANSISTOR			
Q0102	2SA1037AK/QR/-X	SI.TRANSISTOR			
Q0103	DTC323TK-X	DIGI.TRANSISTOR			
Q0104-07	2SC2412K/QR/-X	SI.TRANSISTOR			
Q0108	2SA1037AK/QR/-X	SI.TRANSISTOR			
Q0109-10	DTC323TK-X	DIGI.TRANSISTOR			
Q0111-12	2SC2412K/QR/-X	SI.TRANSISTOR			
Q0116	2SA933AS/QR/-T	SI.TRANSISTOR			
Q0118	2SC1740S/QR/-T	SI.TRANSISTOR			
Q0119-20	2SC2412K/QR/-X	SI.TRANSISTOR			
Q0601	2SC2412K/QR/-X	SI.TRANSISTOR			
Q0602	DTC323TK-X	DIGI.TRANSISTOR			
Q0603	2SA1037AK/QR/-X	SI.TRANSISTOR			
IC					
IC0101	CXA2089Q-X	I C			
IC0602	BA4558F-X	I.C.(MONO-ANA)			
IC0603	MSP3415D-QG-B3X	IC			
OTHERS					
J0001	QNZ0465-001	PIN CONNECTOR			
J0002	QNZ0463-001	PIN CONNECTOR			
K0101-04	CE42681-001Y	BEADS CORE			
K0601	QQR0621-002Z	BEADS CORE			
LC0601-02	CE42482-103Y	EMI FILTER			
X0601	CE42546-001Z	CRYSTAL			

AV28WT5EKS

PRINTED WIRING BOARD PARTS LIST

■MAIN P.W. BOARD ASS'Y (SJK-1912A-U2)

⚠ Symbol No.	Part No.	Part Name	Description
RESISTOR			
R1001	NRSA02J-102X	MG R	1kΩ 1/10W J
R1004-06	NRSA02J-102X	MG R	1kΩ 1/10W J
R1007	NRSA02J-104X	MG R	100kΩ 1/10W J
R1008	NRSA02J-0R0X	MG R	0.0Ω 1/10W J
R1304	QRG01GJ-121	OM R	120Ω 1W J
R1305	NRSA02J-562X	MG R	5.6kΩ 1/10W J
R1306	NRSA02J-222X	MG R	2.2kΩ 1/10W J
R1307	NRSA02J-102X	MG R	1kΩ 1/10W J
R1308	NRSA02J-471X	MG R	470Ω 1/10W J
R1309	NRSA02J-222X	MG R	2.2kΩ 1/10W J
R1310-11	NRSA02J-391X	MG R	390Ω 1/10W J
R1312-13	NRSA02J-101X	MG R	100Ω 1/10W J
R1314	NRSA02J-562X	MG R	5.6kΩ 1/10W J
R1316	NRSA02J-224X	MG R	220kΩ 1/10W J
R1317	NRSA02J-101X	MG R	100Ω 1/10W J
R1318-21	NRSA02J-102X	MG R	1kΩ 1/10W J
R1327	NRSA02J-0R0X	MG R	0.0Ω 1/10W J
R1328-29	NRSA02J-102X	MG R	1kΩ 1/10W J
R1330	NRSA02J-472X	MG R	4.7kΩ 1/10W J
R1331	NRSA02J-333X	MG R	33kΩ 1/10W J
R1332-33	NRSA02J-222X	MG R	2.2kΩ 1/10W J
R1335	NRSA02J-273X	MG R	27kΩ 1/10W J
R1340-41	NRSA02J-333X	MG R	33kΩ 1/10W J
R1342	NRSA02J-152X	MG R	1.5kΩ 1/10W J
R1343	NRSA02J-272X	MG R	2.7kΩ 1/10W J
R1344	NRSA02J-471X	MG R	470Ω 1/10W J
R1345	NRSA02J-102X	MG R	1kΩ 1/10W J
R1346	NRSA02J-223X	MG R	22kΩ 1/10W J
R1401-02	NRSA02J-103X	MG R	10kΩ 1/10W J
R1403	NRSA02J-102X	MG R	1kΩ 1/10W J
R1404	NRSA02J-183X	MG R	18kΩ 1/10W J
R1405	NRSA02J-223X	MG R	22kΩ 1/10W J
R1409	NRSA02J-0R0X	MG R	0.0Ω 1/10W J
R1411	NRVA02D-473X	MF R	47kΩ 1/10W D
R1413	NRVA02D-223X	MF R	22kΩ 1/10W D
R1414	NRVA02D-101X	MF R	100Ω 1/10W D
R1415	NRSA02J-562X	MG R	5.6kΩ 1/10W J
R1416	NRSA02J-101X	MG R	100Ω 1/10W J
R1417	NRSA02J-223X	MG R	22kΩ 1/10W J
R1418	NRSA02J-682X	MG R	6.8kΩ 1/10W J
R1419	NRSA02J-562X	MG R	5.6kΩ 1/10W J
R1420	NRSA02J-183X	MG R	18kΩ 1/10W J
R1501	NRSA02J-621X	MG R	620Ω 1/10W J
R1502	NRSA02J-103X	MG R	10kΩ 1/10W J
R1503	NRSA02J-104X	MG R	100kΩ 1/10W J
R1504	NRSA02J-822X	MG R	8.2kΩ 1/10W J
R1505-06	NRSA02J-221X	MG R	220Ω 1/10W J
R1507	NRSA02J-102X	MG R	1kΩ 1/10W J
R1508-09	NRSA02J-223X	MG R	22kΩ 1/10W J
R1511	NRSA02J-0R0X	MG R	0.0Ω 1/10W J
R1514	NRSA02J-472X	MG R	4.7kΩ 1/10W J
R1516	NRSA02J-222X	MG R	2.2kΩ 1/10W J
R1517	NRSA02J-472X	MG R	4.7kΩ 1/10W J
R1518	NRSA02J-682X	MG R	6.8kΩ 1/10W J
R1519	NRSA02J-562X	MG R	5.6kΩ 1/10W J
R1520	NRSA02J-152X	MG R	1.5kΩ 1/10W J
R1571	NRSA02J-101X	MG R	100Ω 1/10W J
R1572	NRSA02J-133X	MG R	13kΩ 1/10W J
R1573	NRSA02J-821X	MG R	820Ω 1/10W J
R1608-09	NRSA02J-822X	MG R	8.2kΩ 1/10W J
R1610-11	NRSA02J-103X	MG R	10kΩ 1/10W J
R1633	NRSA02J-273X	MG R	27kΩ 1/10W J
R1635	NRSA02J-561X	MG R	560Ω 1/10W J
R1638	NRSA02J-473X	MG R	47kΩ 1/10W J
R1639	NRSA02J-103X	MG R	10kΩ 1/10W J
R1642	QRK126J-4R7X	C R	4.7Ω 1/2W J
R1644	NRSA02J-561X	MG R	560Ω 1/10W J

⚠ Symbol No.	Part No.	Part Name	Description
RESISTOR			
R1645	QRK126J-4R7X	C R	4.7Ω 1/2W J
R1648	NRSA02J-104X	MG R	100kΩ 1/10W J
R1690	QRG01GJ-270	OM R	27Ω 1W J
R1701	NRSA02J-221X	MG R	220Ω 1/10W J
R1703	NRSA02J-273X	MG R	27kΩ 1/10W J
R1704	NRSA02J-473X	MG R	47kΩ 1/10W J
R1705	NRSA02J-102X	MG R	1kΩ 1/10W J
R1706	NRSA02J-223X	MG R	22kΩ 1/10W J
R1707-10	NRSA02J-103X	MG R	10kΩ 1/10W J
R1713-14	NRSA02J-102X	MG R	1kΩ 1/10W J
R1716	NRSA02J-102X	MG R	1kΩ 1/10W J
R1717	NRSA02J-104X	MG R	100kΩ 1/10W J
R1718-19	NRSA02J-682X	MG R	6.8kΩ 1/10W J
R1720	NRSA02J-472X	MG R	4.7kΩ 1/10W J
R1722	NRSA02J-472X	MG R	4.7kΩ 1/10W J
R1724-25	NRSA02J-472X	MG R	4.7kΩ 1/10W J
R1727	NRSA02J-472X	MG R	4.7kΩ 1/10W J
R1729-31	NRSA02J-221X	MG R	220Ω 1/10W J
R1740	NRSA02J-331X	MG R	330Ω 1/10W J
R1745	NRSA02J-472X	MG R	4.7kΩ 1/10W J
R1747	NRSA02J-472X	MG R	4.7kΩ 1/10W J
R1748-52	NRSA02J-221X	MG R	220Ω 1/10W J
R1753	NRSA02J-102X	MG R	1kΩ 1/10W J
R1755	NRSA02J-102X	MG R	1kΩ 1/10W J
R1756	NRSA02J-103X	MG R	10kΩ 1/10W J
R1759	NRSA02J-472X	MG R	4.7kΩ 1/10W J
R1763	NRSA02J-103X	MG R	10kΩ 1/10W J
R1764-66	NRSA02J-221X	MG R	220Ω 1/10W J
R1767	NRSA02J-103X	MG R	10kΩ 1/10W J
R1770	NRSA02J-272X	MG R	2.7kΩ 1/10W J
R1771-73	NRSA02J-222X	MG R	2.2kΩ 1/10W J
R1774-75	NRSA02J-333X	MG R	33kΩ 1/10W J
R1777-79	NRSA02J-222X	MG R	2.2kΩ 1/10W J
R1780	NRSA02J-102X	MG R	1kΩ 1/10W J
R1784-85	NRSA02J-223X	MG R	22kΩ 1/10W J
R1786	NRSA02J-473X	MG R	47kΩ 1/10W J
R1787	NRSA02J-332X	MG R	3.3kΩ 1/10W J
R1788	NRSA02J-272X	MG R	2.7kΩ 1/10W J
R1789	NRSA02J-473X	MG R	47kΩ 1/10W J
R1790	NRSA02J-682X	MG R	6.8kΩ 1/10W J
R1801	NRSA02J-333X	MG R	33kΩ 1/10W J
R1802	NRSA02J-222X	MG R	2.2kΩ 1/10W J
R1805	NRSA02J-332X	MG R	3.3kΩ 1/10W J
R1806	NRSA02J-184X	MG R	180kΩ 1/10W J
R1871	NRSA02J-102X	MG R	1kΩ 1/10W J
R1872-73	NRSA02J-222X	MG R	2.2kΩ 1/10W J
R1874	NRSA02J-272X	MG R	2.7kΩ 1/10W J
R1875	NRSA02J-104X	MG R	100kΩ 1/10W J
R1876	NRSA02J-102X	MG R	1kΩ 1/10W J
R1877	NRSA02J-393X	MG R	39kΩ 1/10W J
R1878-80	NRSA02J-152X	MG R	1.5kΩ 1/10W J
R1881-82	NRSA02J-331X	MG R	330Ω 1/10W J
R1883	NRSA02J-102X	MG R	1kΩ 1/10W J
R1884	NRSA02J-331X	MG R	330Ω 1/10W J
CAPACITOR			
C1001	NCB21HK-222X	C CAP.	2200pF 50V K
C1003	NCB21EK-104X	C CAP.	0.1μF 25V K
C1004	QETN1CM-108Z	E CAP.	1000μF 16V M
C1005	QETN1CM-107Z	E CAP.	100μF 16V M
C1006	QETN1HM-106Z	E CAP.	10μF 50V M
C1007	NCB21HK-104X	CHIP CAP.	0.1μF 50V K
C1008	QETN1HM-106Z	E CAP.	10μF 50V M
C1009	NCB21EK-104X	C CAP.	0.1μF 25V K
C1010	QETN1CM-107Z	E CAP.	100μF 16V M
C1301	NCB21EK-104X	C CAP.	0.1μF 25V K

CAPACITOR

⚠ Symbol No.	Part No.	Part Name	Description		
C1302	NCB21HK-823X	CHIP CAP.	0.082μF	50V	K
C1303	QETN1EM-476Z	E CAP.	47μF	25V	M
C1304	NCB21HK-103X	C CAP.	0.01μF	50V	K
C1305	QETN1CM-107Z	E CAP.	100μF	16V	M
C1306	NCB21HK-103X	C CAP.	0.01μF	50V	K
C1307	QETN1CM-477Z	E CAP.	470μF	16V	M
C1308	NDC21HJ-120X	C CAP.	12pF	50V	J
C1309	QETN1HM-475Z	E CAP.	4.7μF	50V	M
C1310	NCB21HK-103X	C CAP.	0.01μF	50V	K
C1311	QETN1HM-106Z	E CAP.	10μF	50V	M
C1312	NDC21HJ-680X	C CAP.	68pF	50V	J
C1313	QETN1CM-107Z	E CAP.	100μF	16V	M
C1314	NCB21HK-103X	C CAP.	0.01μF	50V	K
C1315	QETN1HM-106Z	E CAP.	10μF	50V	M
C1319	QETN1CM-107Z	E CAP.	100μF	16V	M
C1320	NCB21HK-103X	C CAP.	0.01μF	50V	K
C1321-23	NCB21EK-104X	C CAP.	0.1μF	25V	K
C1324-26	QETN1HM-105Z	E CAP.	1μF	50V	M
C1327	QETN1HM-475Z	E CAP.	4.7μF	50V	M
C1328	QETN1CM-107Z	E CAP.	100μF	16V	M
C1329	QETN1EM-476Z	E CAP.	47μF	25V	M
C1331	QETN1HM-105Z	E CAP.	1μF	50V	M
C1332	NCB21HK-103X	C CAP.	0.01μF	50V	K
C1333	NCB21EK-104X	C CAP.	0.1μF	25V	K
C1401	QETN1HM-105Z	E CAP.	1μF	50V	M
C1403-05	NCB21HK-103X	C CAP.	0.01μF	50V	K
C1406	QFV71HJ-184Z	MF CAP.	0.18μF	50V	J
C1407	QFV71HJ-824Z	MF CAP.	0.82μF	50V	J
C1408	NCB21HK-153X	C CAP.	0.015μF	50V	K
C1501	QETN1CM-107Z	E CAP.	100μF	16V	M
C1502-04	NCB21HK-103X	C CAP.	0.01μF	50V	K
C1505	NCB21HK-332X	C CAP.	3300pF	50V	K
C1506	QETN1HM-335Z	E CAP.	3.3μF	50V	M
C1507	NCB21HK-103X	C CAP.	0.01μF	50V	K
C1508	QETN1CM-108Z	E CAP.	1000μF	16V	M
C1509	NCB21HK-823X	CHIP CAP.	0.082μF	50V	K
C1510-11	NCB21HK-103X	C CAP.	0.01μF	50V	K
C1512	QTMN1HM-105Z	E CAP.	0.1μF	50V	M
C1513	QETM1CM-228	E CAP.	2200μF	16V	M
C1514	NCB21HK-103X	C CAP.	0.01μF	50V	K
C1515	QFV71HJ-394Z	MF CAP.	0.39μF	50V	J
C1516	NCB21HK-103X	C CAP.	0.01μF	50V	K
C1571	NCB21HK-103X	C CAP.	0.01μF	50V	K
C1605	QETN1HM-106Z	E CAP.	10μF	50V	M
C1606	QETN1EM-227Z	E CAP.	220μF	25V	M
C1622-23	QETN1CM-227Z	E CAP.	220μF	16V	M
C1624	QETN1EM-476Z	E CAP.	47μF	25V	M
C1626	QENC1EM-107Z	BP E CAP.	100μF	25V	M
C1627	QETM1EM-228	E CAP.	2200μF	25V	M
C1629	QENC1EM-107Z	BP E CAP.	100μF	25V	M
C1631	QETN1EM-476Z	E CAP.	47μF	25V	M
C1632	NCS21HJ-221X	C CAP.	220pF	50V	J
C1633-34	QFV71HJ-104Z	MF CAP.	0.1μF	50V	J
C1635-36	QETN1EM-108Z	E CAP.	1000μF	25V	M
C1637-38	QFV71HJ-104Z	MF CAP.	0.1μF	50V	J
C1639	QETN1HM-106Z	E CAP.	10μF	50V	M
C1640	NCS21HJ-221X	C CAP.	220pF	50V	J
C1641	QETN1HM-226Z	E CAP.	22μF	50V	M
C1668	NCB21EK-104X	C CAP.	0.1μF	25V	K
C1671	QETN1CM-107Z	E CAP.	100μF	16V	M
C1672	NCB21EK-104X	C CAP.	0.1μF	25V	K
C1701	NCF21CZ-105X	C CAP.	1μF	16V	Z
C1703	QETN1EM-476Z	E CAP.	47μF	25V	M
C1704	NCB21EK-104X	C CAP.	0.1μF	25V	K
C1705	QETN1AM-107Z	E CAP.	100μF	10V	M
C1706	NCB21EK-104X	C CAP.	0.1μF	25V	K
C1707	QETN1HM-474Z	E CAP.	0.47μF	50V	M
C1708	QETN1EM-476Z	E CAP.	47μF	25V	M
C1709-10	NDC21HJ-9R0X	C CAP.	9.0pF	50V	J
C1711	NCB21EK-104X	C CAP.	0.1μF	25V	K
C1712	NDC21HJ-151X	C CAP.	150pF	50V	J
C1716-17	QETN1HM-105Z	E CAP.	1μF	50V	M

CAPACITOR

⚠ Symbol No.	Part No.	Part Name	Description		
C1718	NCB21HK-333X	C CAP.	0.033μF	50V	K
C1725	NCB21HK-102X	C CAP.	1000pF	50V	K
C1871	NCB21EK-104X	C CAP.	0.1μF	25V	K
C1872	NCB21HK-223X	C CAP.	0.022μF	50V	K
C1873	NDC21HJ-221X	C CAP.	220pF	50V	J
C1874-75	NDC21HJ-150X	C CAP.	15pF	50V	J
C1876	NCB21HK-102X	C CAP.	1000pF	50V	K
C1877	NCB21EK-104X	C CAP.	0.1μF	25V	K
C1878	NCB21HK-102X	C CAP.	1000pF	50V	K
C1879	NDC21HJ-221X	C CAP.	220pF	50V	J
C1880	QETN1AM-477Z	E CAP.	470μF	10V	M
C1881	NCB21EK-104X	C CAP.	0.1μF	25V	K
C1882	QETN1EM-476Z	E CAP.	47μF	25V	M
C1883	NCB21HK-103X	C CAP.	0.01μF	50V	K
C1884-85	NCB21EK-104X	C CAP.	0.1μF	25V	K
C1886	NCB21HK-103X	C CAP.	0.01μF	50V	K
C1887-89	QETN1HM-106Z	E CAP.	10μF	50V	M

COIL

L1001	QQL244K-5R6Z	PEAKING COIL	5.6μH
L1002	QQL244K-270Z	PEAKING COIL	27μH
L1301-02	QQL244K-4R7Z	PEAKING COIL	4.7μH
L1305	QQL244K-4R7Z	PEAKING COIL	4.7μH
L1501	QQL244J-151Z	PEAKING COIL	150μH
L1701	QQL244K-4R7Z	PEAKING COIL	4.7μH
L1702	QQL244K-3R9Z	PEAKING COIL	
L1871	QQL244K-4R7Z	PEAKING COIL	4.7μH

DIODE

D1301	MA3051/M/-X	ZENER DIODE
D1302-04	MA111-X	SI.DIODE
D1503	RB100A-T2	SI.DIODE
D1602	MA111-X	SI.DIODE
D1608	MA111-X	SI.DIODE
D1612	MA111-X	SI.DIODE
D1624-25	MA111-X	SI.DIODE
D1701	MA3068/M/-X	ZENER DIODE
D1702	MA111-X	SI.DIODE
D1704	MA111-X	SI.DIODE
D1705	MA3036-X	ZENER DIODE
D1706-08	MA111-X	SI.DIODE
D1710	MA111-X	SI.DIODE

TRANSISTOR

Q1301-02	2SA1037AK/QR/-X	SI.TRANSISTOR
Q1311	DTC124EKA-X	DIGI.TRANSISTOR
Q1312	2SA1037AK/QR/-X	SI.TRANSISTOR
Q1401	DTC124EKA-X	DIGI.TRANSISTOR
Q1402	2SC2412K/QR/-X	SI.TRANSISTOR
Q1604	2SA1037AK/QR/-X	SI.TRANSISTOR
Q1609	2SA1037AK/QR/-X	SI.TRANSISTOR
Q1610	DTC323TK-X	DIGI.TRANSISTOR
Q1612	DTC323TK-X	DIGI.TRANSISTOR
Q1701-04	2SC2412K/QR/-X	SI.TRANSISTOR
Q1705	2SA1037AK/QR/-X	SI.TRANSISTOR
Q1708	2SA1037AK/QR/-X	SI.TRANSISTOR
Q1709-10	2SC2412K/QR/-X	SI.TRANSISTOR
Q1871	2SA1037AK/QR/-X	SI.TRANSISTOR
Q1872	2SC2412K/QR/-X	SI.TRANSISTOR

IC

IC1301	TB1227CN	I C	
IC1302	TC4053BP/N/	I.C.(DIGI-MOS)	
IC1501	AN5441SA-W	I C	
IC1601	LA4446	I.C.(MONO-ANA)	
IC1607	BA05T	I.C.(MONO-ANA)	
IC1701	M37280MK-207SP	I C	
IC1702	AT24C16-28WT5	I.C.	(SERVICE)
IC1703	L78LR05E-MA	I.C.(MONO-ANA)	
IC1871	ET417	I.C.(M)	
IC1872	ET206	I.C.(M)	

⚠ Symbol No.	Part No.	Part Name	Description
OTHERS			
CN1001	QGF1220C2-19	FFC/FPC CONNECTO	
K1001	QQR0621-002Z	BEADS CORE	
K1004	QQR0621-002Z	BEADS CORE	
K1307	QQR0621-002Z	BEADS CORE	
K1872	QQL244K-3R3Z	PEAKING COIL	
LC1301	CE42142-222Z	EMI FILTER	
TU1001	QAU0189-002	TUNER	
X1301	QAX0305-001Z	CRYSTAL	
X1701	CST8.00MTW	CER.RESONATOR	
X1871	CE41257-001Z	CRYSTAL	

■ POWER & DEF. P.W. BOARD ASS'Y (SJK-2512A-U2)

Refer to PARTS LIST in page 46 for this P.W. board.

■ CRT SOCKET P.W. BOARD ASS'Y (SJK-3512A-U2)

Refer to PARTS LIST in page 48 for this P.W. board.

■ FRONT CONTROL P.W. BOARD ASS'Y (SJK-8512A-U2)

Refer to PARTS LIST in page 48 for this P.W. board.

■ AV SEL. P.W. BOARD ASS'Y (SJK0S912A-U2)

⚠ Symbol No.	Part No.	Part Name	Description
RESISTOR			
R0606	QRG01GJ-181	OM R	180Ω 1W J
R0607	NRSA02J-123X	MG R	12kΩ 1/10W J
R0608	NRSA02J-181X	MG R	180Ω 1/10W J
R0609	NRSA02J-123X	MG R	12kΩ 1/10W J
R0610	NRSA02J-122X	MG R	1.2kΩ 1/10W J
R0614	NRSA02J-103X	MG R	10kΩ 1/10W J
R0615	NRSA02J-101X	MG R	100Ω 1/10W J
R0617	NRSA02J-102X	MG R	1kΩ 1/10W J
R0618	NRSA02J-332X	MG R	3.3kΩ 1/10W J
R0620	NRSA02J-333X	MG R	33kΩ 1/10W J
R0622	NRSA02J-103X	MG R	10kΩ 1/10W J
R0623	NRSA02J-102X	MG R	1kΩ 1/10W J
R0628	NRSA02J-0R0X	MG R	0.0Ω 1/10W J
R0629-31	NRSA02J-101X	MG R	100Ω 1/10W J
R0632	NRSA02J-332X	MG R	3.3kΩ 1/10W J
R0633	NRSA02J-221X	MG R	220Ω 1/10W J
R0634-35	NRSA02J-332X	MG R	3.3kΩ 1/10W J
R0647-48	NRSA02J-101X	MG R	100Ω 1/10W J
R0651	NRSA02J-122X	MG R	1.2kΩ 1/10W J
CAPACITOR			
C0101	NDC21HJ-151X	C CAP.	150pF 50V J
C0102	QETN1CM-477Z	E CAP.	470μF 16V M
C0103-05	QETN1HM-106Z	E CAP.	10μF 50V M
C0106	NCB21HK-472X	C CAP.	4700pF 50V K
C0107	NCB21HK-152X	C CAP.	1500pF 50V K
C0108	NCB21HK-472X	C CAP.	4700pF 50V K
C0109	NCB21HK-152X	C CAP.	1500pF 50V K
C0110	QETN1CM-477Z	E CAP.	470μF 16V M
C0111-12	NCB21HK-472X	C CAP.	4700pF 50V K
C0113	NDC21HJ-151X	C CAP.	150pF 50V J
C0114-15	NCB21HK-472X	C CAP.	4700pF 50V K
C0116-17	QETN1HM-106Z	E CAP.	10μF 50V M
C0118	NCB21HK-102X	C CAP.	1000pF 50V K
C0119	QETN1HM-105Z	E CAP.	1μF 50V M
C0120	QETN1HM-106Z	E CAP.	10μF 50V M
C0121	QETN1HM-105Z	E CAP.	1μF 50V M
C0122	NCB21HK-103X	C CAP.	0.01μF 50V K
C0123	NCB21HK-102X	C CAP.	1000pF 50V K
C0124-25	QETN1HM-106Z	E CAP.	10μF 50V M
C0126	QETN1HM-105Z	E CAP.	1μF 50V M
C0127	QETN1HM-106Z	E CAP.	10μF 50V M
C0128	QETN1HM-105Z	E CAP.	1μF 50V M
C0129	QETN1HM-106Z	E CAP.	10μF 50V M
C0130	QETN1HM-105Z	E CAP.	1μF 50V M
C0131	NCB21HK-102X	C CAP.	1000pF 50V K
C0132	QETN1HM-105Z	E CAP.	1μF 50V M
C0133	NCB21HK-103X	C CAP.	0.01μF 50V K
C0136	QETN1HM-106Z	E CAP.	10μF 50V M
C0137	QENC1EM-106Z	BP E CAP.	10μF 25V M
C0139	QENC1EM-106Z	BP E CAP.	10μF 25V M
C0140	QETN1CM-107Z	E CAP.	100μF 16V M
C0141	NCB21HK-103X	C CAP.	0.01μF 50V K
C0142	QENC1HM-105Z	BP E CAP.	1μF 50V M
C0143	QENC1EM-106Z	BP E CAP.	10μF 25V M
C0144	QENC1HM-105Z	BP E CAP.	1μF 50V M
C0145-46	QETN1CM-107Z	E CAP.	100μF 16V M
C0147	QETN1CM-477Z	E CAP.	470μF 16V M
C0149	NCB21HK-103X	C CAP.	0.01μF 50V K
C0150-51	QETN1HM-106Z	E CAP.	10μF 50V M
C0152-53	QETN1HM-105Z	E CAP.	1μF 50V M
C0154-55	NDC21HJ-680X	C CAP.	68pF 50V J
C0157-58	NDC21HJ-680X	C CAP.	68pF 50V J
C0159	NDC21HJ-561X	C CAP.	560pF 50V J
C0160	NDC21HJ-102X	C CAP.	1000pF 50V J
C0161	NDC21HJ-680X	C CAP.	68pF 50V J
C0610	NDC21HJ-821X	C CAP.	820pF 50V J
C0611-12	NDC21HJ-470X	C CAP.	47pF 50V J
C0614	NDC21HJ-180X	C CAP.	18pF 50V J
C0616	QETN1CM-107Z	E CAP.	100μF 16V M
C0617	NCB21EK-104X	C CAP.	0.1μF 25V K
C0618	QETN1HM-106Z	E CAP.	10μF 50V M

⚠ Symbol No.	Part No.	Part Name	Description
CAPACITOR			
C0619	NCB21EK-104X	C CAP.	0.1μF 25V K
C0620	QETN1HM-106Z	E CAP.	10μF 50V M
C0621-22	QENC1HM-105Z	BP E CAP.	1μF 50V M
C0623	NCB21EK-104X	C CAP.	0.1μF 25V K
C0624	QETN1HM-106Z	E CAP.	10μF 50V M
C0625	QETN1CM-227Z	E CAP.	220μF 16V M
C0626	NCB21HK-153X	C CAP.	0.015μF 50V K
C0627	QENC1HM-105Z	BP E CAP.	1μF 50V M
C0628	NCB21HK-223X	C CAP.	0.022μF 50V K
C0629	QETN1HM-106Z	E CAP.	10μF 50V M
C0630-31	NCB21HK-102X	C CAP.	1000pF 50V K
C0632	NCB21EK-104X	C CAP.	0.1μF 25V K
C0633	QETN1HM-106Z	E CAP.	10μF 50V M
C0634-35	NCB21HK-103X	C CAP.	0.01μF 50V K
C0636	NDC21HJ-2R0X	C CAP.	2.0pF 50V J
C0637	NCB21HK-222X	C CAP.	2200pF 50V K
C0638	QETN1CM-336Z	E CAP.	33μF 16V M
C0639	NCB21HK-153X	C CAP.	0.015μF 50V K
C0640	NCB21HK-223X	C CAP.	0.022μF 50V K
C0641	NCB21HK-222X	C CAP.	2200pF 50V K
C0642	NDC21HJ-2R0X	C CAP.	2.0pF 50V J
C0643	QENC1HM-105Z	BP E CAP.	1μF 50V M
C0645	NCB21HK-103X	C CAP.	0.01μF 50V K
C0646	NCB21EK-104X	C CAP.	0.1μF 25V K
C0647	QETN1CM-107Z	E CAP.	100μF 16V M
C0648	NCB21EK-104X	C CAP.	0.1μF 25V K
C0659-60	QENC1HM-105Z	BP E CAP.	1μF 50V M
C0677-78	NCB21HK-102X	C CAP.	1000pF 50V K
COIL			
L0114	QQR0716-001Z	LEAD CORE	
L0601	QQL244K-220Z	PEAKING COIL	22μH
L0602	QQL244K-180Z	PEAKING COIL	18μH
L0604	QQL244K-100Z	PEAKING COIL	10μH
L0605	QQL244K-4R7Z	PEAKING COIL	4.7μH
DIODE			
D0101-13	MA3120/M/-X	ZENER DIODE	
D0601	RD8.2E/B2/-T2	ZENER DIODE	
TRANSISTOR			
Q0101	DTC323TK-X	DIGI.TRANSISTOR	
Q0102	2SA1037AK/QR/-X	SI.TRANSISTOR	
Q0103	DTC323TK-X	DIGI.TRANSISTOR	
Q0104-07	2SC2412K/QR/-X	SI.TRANSISTOR	
Q0108	2SA1037AK/QR/-X	SI.TRANSISTOR	
Q0109-10	DTC323TK-X	DIGI.TRANSISTOR	
Q0111-12	2SC2412K/QR/-X	SI.TRANSISTOR	
Q0116	2SA933AS/QR/-T	SI.TRANSISTOR	
Q0118	2SC1740S/QR/-T	SI.TRANSISTOR	
Q0119-20	2SC2412K/QR/-X	SI.TRANSISTOR	
Q0601	2SC2412K/QR/-X	SI.TRANSISTOR	
IC			
IC0101	CXA2089Q-X	I C	
IC0602	BA4558F-X	I.C.(MONO-ANA)	
IC0603	MSP3415D-QG-B3X	IC	
OTHERS			
J0001	QNZ0465-001	PIN CONNECTOR	
J0002	QNZ0463-001	PIN CONNECTOR	
K0101-04	CE42681-001Y	BEADS CORE	
K0601	QQR0621-002Z	BEADS CORE	
LC0601-02	CE42482-103Y	EMI FILTER	
X0601	CE42546-001Z	CRYSTAL	

AV28WT5EPS / AV28WT5EIS / AV28WT5EKS

PACKING

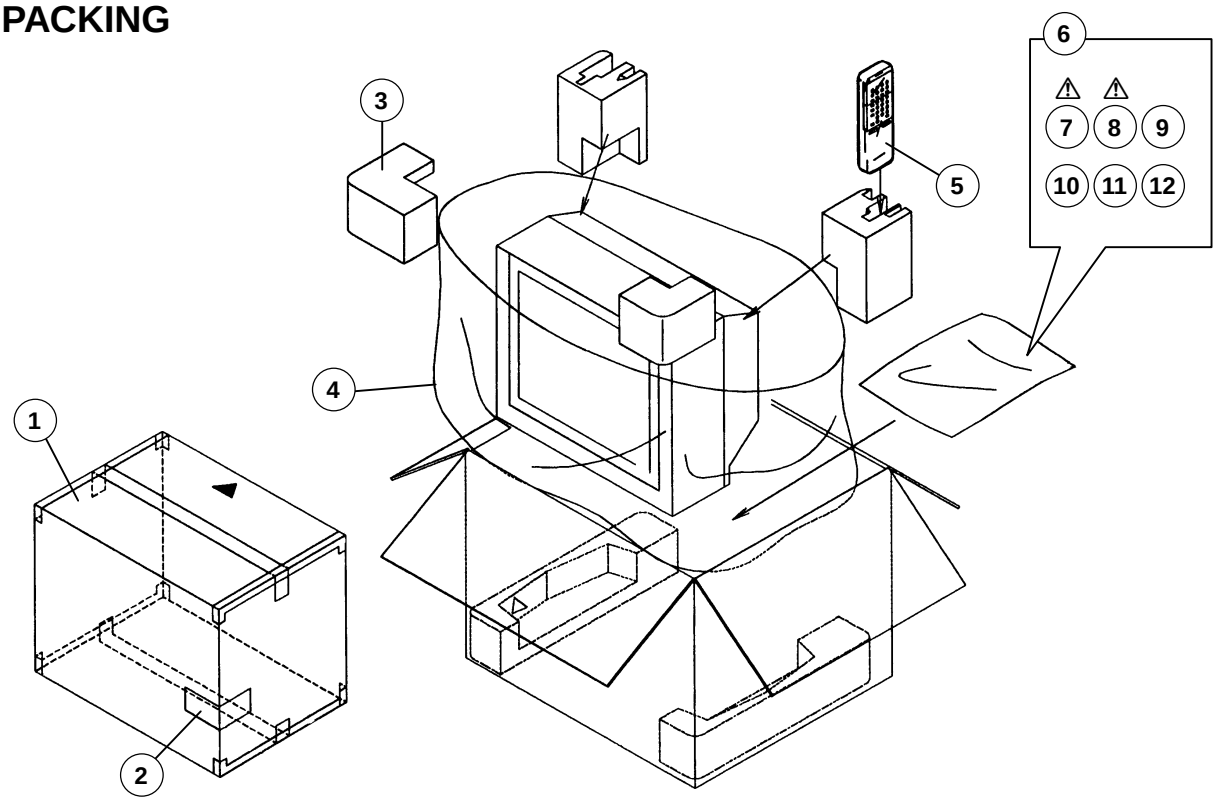

PACKING PARTS LIST

AV28WT5EPS

⚠	Ref.No.	Part No.	Part Name	Description
	1	AEM1002-B67-E	EURO BOX	
	2	AEM1052-031-E	EURO LABEL	
	3	LC10522-002B-U	CUSHION ASSY	6pcs in 1set
	4	AEM1047-003-E	POLY BAG	
	5	RM-C54-1C	REMOCON UNIT	
	6	AEM3021-002-E	POLY BAG	
⚠	7	LCT0897-001A-U	INST BOOK	
⚠	8	LCT0898-001A-U	INST BOOK	
	9	BT-54013-1E	WARRANTY CARD	
	10	AEM1061-001-E	X-RAY CARD	
	11	2824WT5-HSAEI	S.DIAGRAM	(SERVICE)

AV28WT5EIS

	1	AEM1002-B67-E	EURO BOX	
	2	AEM1052-030-E	EURO LABEL	
	3	LC10522-002B-U	CUSHION ASSY	6pcs in 1set
	4	AEM1047-003-E	POLY BAG	
	5	RM-C55-1C	REMOCON UNIT	
	6	AEM3021-002-E	POLY BAG	
⚠	7	LCT0900-001A-U	INST BOOK	
	9	BT-54013-1E	WARRANTY CARD	

AV28WT5EKS

	1	AEM1002-C50-E	EURO BOX	
	2	AEM1052-029-E	EURO LABEL	
	3	LC10522-002B-U	CUSHION ASSY	6pcs in 1set
	4	AEM1047-003-E	POLY BAG	
	5	RM-C55-1C	REMOCON UNIT	
	6	AEM3021-002-E	POLY BAG	
⚠	7	LCT0899-001A-U	INST BOOK	
	9	BT-54013-1E	WARRANTY CARD	
	12	AEM3148-001-E	REG SHEET	

AV24WT5EPS / AV24WT5EIS / AV24WT5EKS

EXPLODED VIEW PARTS LIST

⚠	Ref.No.	Part No.	Part Name	Description
⚠	V01	W56ECK001X03	CRT	Inc.DY.PC MAGNET,WEDGE
⚠	L01	QQW0051-001	DEG.COIL	
⚠	T2551	QQH0093-001	FB TRANSF.	
	1	CHGB0029-0A	BRAIDED ASSY	
	2	CHGB0017-0B	BRAIDED SUB ASSY	
	4	CM36597-001-E	KNOB CAP	
	5	CHFB119-06BD	FFC WIRE	
⚠	6	LC11019-001B-U	CHASSIS BASE	
⚠	7	LC11010-002C-U	AV BOARD	
	8	QYSBSB3012M	TAPPING SCREW	(×2)
⚠	9	QMPK160-185-JC	POWER CORD	(CN-PW) [AV24WT5EPS]
⚠	9	QMPN130-185-JC	POWER CORD	(CN-PW) [AV24WT5EIS] [AV24WT5EKS]
⚠	10	CM46618-A01-E	POWER CORD CLAMP	
⚠	11	CM12675-A05-E	REAR COVER	
	12	QYSBSAG4016N	TAPPING SCREW	(×9)
⚠	13	LC20433-007A-U	RATING LABEL	[AV24WT5EPS]
⚠	14	LC20434-007A-U	RATING LABEL	[AV24WT5EPS]
⚠	14	LC20080-014A-U	RATING LABEL	[AV24WT5EIS]
⚠	14	LC20091-022A-U	RATING LABEL	[AV24WT5EKS]
	15	CM48076-A01	CDS WINDOW	
	16	CM48263-002-E	JVC MARK	
	17	CM36223-A01	LED LENS	
	18	QAS0043-001	SPEAKER	(×2)SP01,SP02
⚠	100	CM12673-00H-E	F.CABINET ASSY	Inc.No.101～105
	101	CM22897-008-E	DOOR	(SERVICE)
	102	CM48229-00A-C	DOOR LATCH	
	103	CM36224-020-E	OPERATION SHEET	
	104	AEM3149-001-E	SPRING	
	105	CM36225-014-E	POWER KNOB	(SERVICE)

EXPLODED VIEW

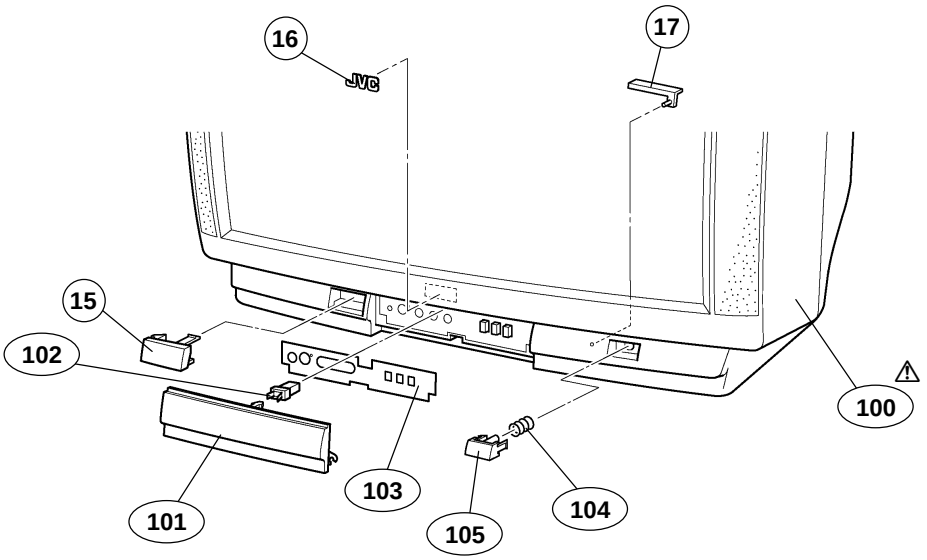

AV24WT5EPS / AV24WT5EIS / AV24WT5EKS

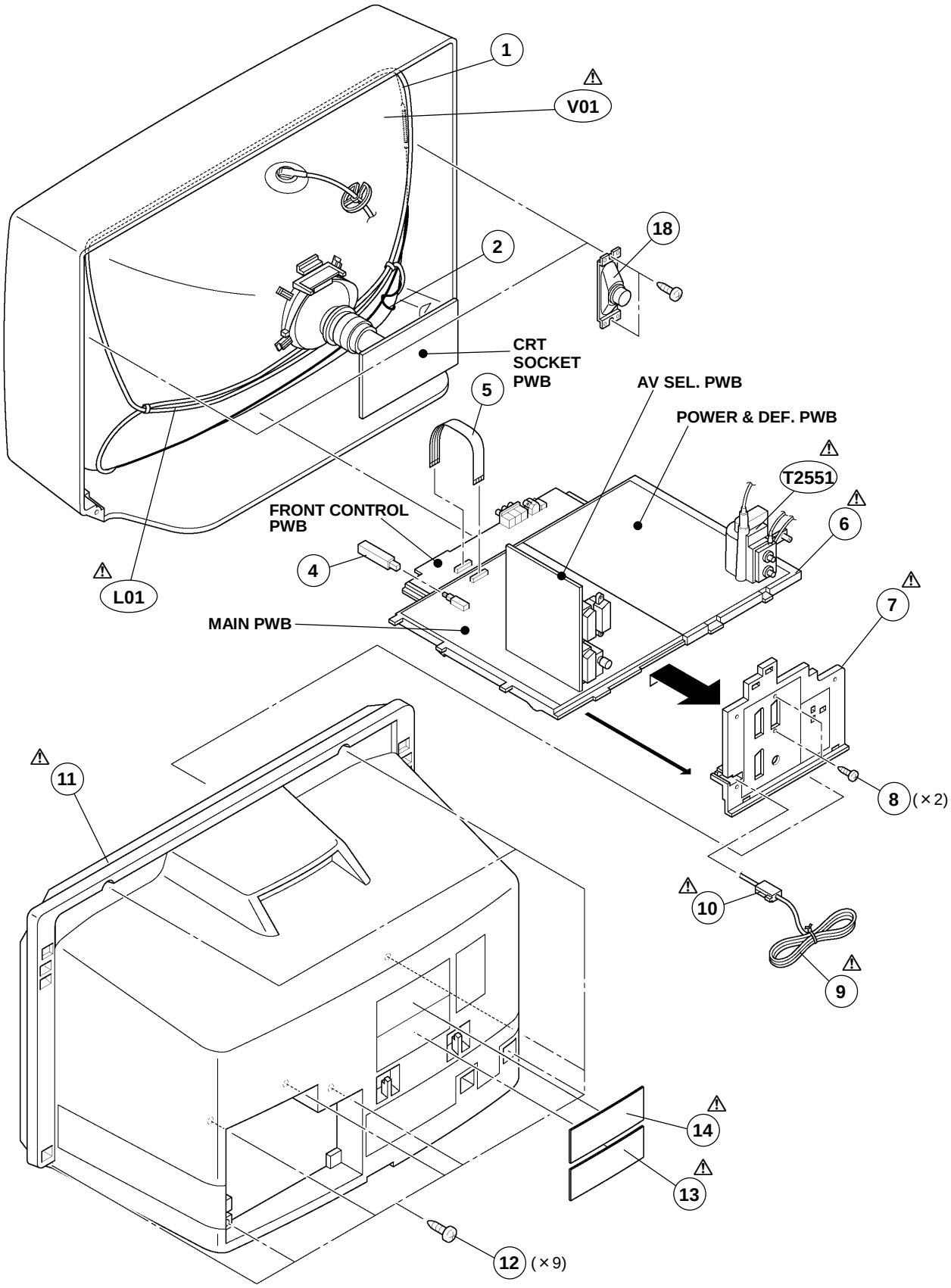

AV24WT5EPS / AV24WT5EIS

PRINTED WIRING BOARD PARTS LIST

■MAIN P.W. BOARD ASS'Y (SJK-1713A-U2)

⚠ Symbol No.	Part No.	Part Name	Description
RESISTOR			
R1001	NRSA02J-102X	MG R	1kΩ 1/10W J
R1002-03	NRSA02J-0R0X	MG R	0.0Ω 1/10W J
R1004-06	NRSA02J-102X	MG R	1kΩ 1/10W J
R1007	NRSA02J-104X	MG R	100kΩ 1/10W J
R1008	NRSA02J-0R0X	MG R	0.0Ω 1/10W J
R1009-10	NRSA02J-104X	MG R	100kΩ 1/10W J
R1304	QRG01GJ-121	OM R	120Ω 1W J
R1305	NRSA02J-562X	MG R	5.6kΩ 1/10W J
R1306	NRSA02J-222X	MG R	2.2kΩ 1/10W J
R1307	NRSA02J-102X	MG R	1kΩ 1/10W J
R1308	NRSA02J-471X	MG R	470Ω 1/10W J
R1309	NRSA02J-222X	MG R	2.2kΩ 1/10W J
R1310-11	NRSA02J-391X	MG R	390Ω 1/10W J
R1312-13	NRSA02J-101X	MG R	100Ω 1/10W J
R1314	NRSA02J-562X	MG R	5.6kΩ 1/10W J
R1316	NRSA02J-224X	MG R	220kΩ 1/10W J
R1317	NRSA02J-101X	MG R	100Ω 1/10W J
R1318-21	NRSA02J-102X	MG R	1kΩ 1/10W J
R1327	NRSA02J-471X	MG R	470Ω 1/10W J
R1328-29	NRSA02J-102X	MG R	1kΩ 1/10W J
R1330	NRSA02J-472X	MG R	4.7kΩ 1/10W J
R1331	NRSA02J-333X	MG R	33kΩ 1/10W J
R1332-33	NRSA02J-222X	MG R	2.2kΩ 1/10W J
R1335	NRSA02J-273X	MG R	27kΩ 1/10W J
R1340-41	NRSA02J-333X	MG R	33kΩ 1/10W J
R1342	NRSA02J-152X	MG R	1.5kΩ 1/10W J
R1343	NRSA02J-272X	MG R	2.7kΩ 1/10W J
R1344	NRSA02J-471X	MG R	470Ω 1/10W J
R1345	NRSA02J-102X	MG R	1kΩ 1/10W J
R1346	NRSA02J-223X	MG R	22kΩ 1/10W J
R1401-02	NRSA02J-103X	MG R	10kΩ 1/10W J
R1403	NRSA02J-102X	MG R	1kΩ 1/10W J
R1404	NRSA02J-183X	MG R	18kΩ 1/10W J
R1405	NRSA02J-223X	MG R	22kΩ 1/10W J
R1409	NRSA02J-0R0X	MG R	0.0Ω 1/10W J
R1411	NRVA02D-473X	MF R	47kΩ 1/10W D
R1413	NRVA02D-223X	MF R	22kΩ 1/10W D
R1414	NRVA02D-101X	MF R	100Ω 1/10W D
R1415	NRSA02J-562X	MG R	5.6kΩ 1/10W J
R1416	NRSA02J-101X	MG R	100Ω 1/10W J
R1417	NRSA02J-223X	MG R	22kΩ 1/10W J
R1418	NRSA02J-153X	MG R	15kΩ 1/10W J
R1419	NRSA02J-102X	MG R	1kΩ 1/10W J
R1420	NRSA02J-183X	MG R	18kΩ 1/10W J
R1501	NRSA02J-621X	MG R	620Ω 1/10W J
R1502	NRSA02J-103X	MG R	10kΩ 1/10W J
R1503	NRSA02J-104X	MG R	100kΩ 1/10W J
R1504	NRSA02J-822X	MG R	8.2kΩ 1/10W J
R1505-06	NRSA02J-221X	MG R	220Ω 1/10W J
R1507	NRSA02J-102X	MG R	1kΩ 1/10W J
R1508-09	NRSA02J-223X	MG R	22kΩ 1/10W J
R1511	NRSA02J-0R0X	MG R	0.0Ω 1/10W J
R1514	NRSA02J-472X	MG R	4.7kΩ 1/10W J
R1516	NRSA02J-222X	MG R	2.2kΩ 1/10W J
R1517	NRSA02J-472X	MG R	4.7kΩ 1/10W J
R1518	NRSA02J-682X	MG R	6.8kΩ 1/10W J
R1519	NRSA02J-562X	MG R	5.6kΩ 1/10W J
R1520	NRSA02J-152X	MG R	1.5kΩ 1/10W J
R1571	NRSA02J-101X	MG R	100Ω 1/10W J
R1572	NRSA02J-133X	MG R	13kΩ 1/10W J
R1573	NRSA02J-821X	MG R	820Ω 1/10W J
R1608-09	NRSA02J-822X	MG R	8.2kΩ 1/10W J
R1610-11	NRSA02J-103X	MG R	10kΩ 1/10W J
R1633	NRSA02J-273X	MG R	27kΩ 1/10W J
R1635	NRSA02J-561X	MG R	560Ω 1/10W J
R1638	NRSA02J-473X	MG R	47kΩ 1/10W J
R1639	NRSA02J-103X	MG R	10kΩ 1/10W J
R1642	QRK126J-4R7X	C R	4.7Ω 1/2W J

⚠ Symbol No.	Part No.	Part Name	Description
RESISTOR			
R1644	NRSA02J-561X	MG R	560Ω 1/10W J
R1645	QRK126J-4R7X	C R	4.7Ω 1/2W J
R1648	NRSA02J-104X	MG R	100kΩ 1/10W J
R1690	QRG01GJ-270	OM R	27Ω 1W J
R1701	NRSA02J-221X	MG R	220Ω 1/10W J
R1703	NRSA02J-273X	MG R	27kΩ 1/10W J
R1704	NRSA02J-473X	MG R	47kΩ 1/10W J
R1705	NRSA02J-102X	MG R	1kΩ 1/10W J
R1706	NRSA02J-223X	MG R	22kΩ 1/10W J
R1707-10	NRSA02J-103X	MG R	10kΩ 1/10W J
R1713-14	NRSA02J-102X	MG R	1kΩ 1/10W J
R1716	NRSA02J-102X	MG R	1kΩ 1/10W J
R1717	NRSA02J-104X	MG R	100kΩ 1/10W J
R1718-19	NRSA02J-682X	MG R	6.8kΩ 1/10W J
R1720	NRSA02J-472X	MG R	4.7kΩ 1/10W J
R1722	NRSA02J-472X	MG R	4.7kΩ 1/10W J
R1724-25	NRSA02J-472X	MG R	4.7kΩ 1/10W J
R1727	NRSA02J-472X	MG R	4.7kΩ 1/10W J
R1729-31	NRSA02J-221X	MG R	220Ω 1/10W J
R1740	NRSA02J-331X	MG R	330Ω 1/10W J
R1743-44	NRSA02J-101X	MG R	100Ω 1/10W J
R1745	NRSA02J-472X	MG R	4.7kΩ 1/10W J
R1747	NRSA02J-472X	MG R	4.7kΩ 1/10W J
R1748-52	NRSA02J-221X	MG R	220Ω 1/10W J
R1753	NRSA02J-102X	MG R	1kΩ 1/10W J
R1755	NRSA02J-102X	MG R	1kΩ 1/10W J
R1756	NRSA02J-103X	MG R	10kΩ 1/10W J
R1759	NRSA02J-472X	MG R	4.7kΩ 1/10W J
R1763	NRSA02J-103X	MG R	10kΩ 1/10W J
R1764-66	NRSA02J-221X	MG R	220Ω 1/10W J
R1767	NRSA02J-103X	MG R	10kΩ 1/10W J
R1770	NRSA02J-272X	MG R	2.7kΩ 1/10W J
R1771-73	NRSA02J-222X	MG R	2.2kΩ 1/10W J
R1774-75	NRSA02J-333X	MG R	33kΩ 1/10W J
R1777-79	NRSA02J-222X	MG R	2.2kΩ 1/10W J
R1780	NRSA02J-102X	MG R	1kΩ 1/10W J
R1784-85	NRSA02J-223X	MG R	22kΩ 1/10W J
R1786	NRSA02J-473X	MG R	47kΩ 1/10W J
R1787	NRSA02J-332X	MG R	3.3kΩ 1/10W J
R1788	NRSA02J-272X	MG R	2.7kΩ 1/10W J
R1789	NRSA02J-473X	MG R	47kΩ 1/10W J
R1790	NRSA02J-682X	MG R	6.8kΩ 1/10W J
R1801	NRSA02J-333X	MG R	33kΩ 1/10W J
R1802	NRSA02J-222X	MG R	2.2kΩ 1/10W J
R1805	NRSA02J-332X	MG R	3.3kΩ 1/10W J
R1806	NRSA02J-184X	MG R	180kΩ 1/10W J
R1871	NRSA02J-102X	MG R	1kΩ 1/10W J
R1872-73	NRSA02J-222X	MG R	2.2kΩ 1/10W J
R1874	NRSA02J-272X	MG R	2.7kΩ 1/10W J
R1875	NRSA02J-104X	MG R	100kΩ 1/10W J
R1876	NRSA02J-102X	MG R	1kΩ 1/10W J
R1877	NRSA02J-393X	MG R	39kΩ 1/10W J
R1878-80	NRSA02J-152X	MG R	1.5kΩ 1/10W J
R1881-82	NRSA02J-331X	MG R	330Ω 1/10W J
R1883	NRSA02J-102X	MG R	1kΩ 1/10W J
R1884	NRSA02J-331X	MG R	330Ω 1/10W J
CAPACITOR			
C1001	NCB21HK-222X	C CAP.	2200pF 50V K
C1003	NCB21EK-104X	C CAP.	0.1μF 25V K
C1004	QETN1CM-108Z	E CAP.	1000μF 16V M
C1005	QETN1CM-107Z	E CAP.	100μF 16V M
C1006	QETN1HM-106Z	E CAP.	10μF 50V M
C1007	NCB21HK-104X	CHIP CAP.	0.1μF 50V K
C1008	QETN1HM-106Z	E CAP.	10μF 50V M
C1009	NCB21EK-104X	C CAP.	0.1μF 25V K
C1010	QETN1CM-107Z	E CAP.	100μF 16V M

CAPACITOR

⚠	Symbol No.	Part No.	Part Name	Description		
	C1301	NCB21EK-104X	C CAP.	0.1μF	25V	K
	C1302	NCB21HK-823X	CHIP CAP.	0.082μF	50V	K
	C1303	QETN1EM-476Z	E CAP.	47μF	25V	M
	C1304	NCB21HK-103X	C CAP.	0.01μF	50V	K
	C1305	QETN1CM-107Z	E CAP.	100μF	16V	M
	C1306	NCB21HK-103X	C CAP.	0.01μF	50V	K
	C1307	QETN1CM-477Z	E CAP.	470μF	16V	M
	C1308	NDC21HJ-120X	C CAP.	12pF	50V	J
	C1309	QETN1HM-475Z	E CAP.	4.7μF	50V	M
	C1310	NCB21HK-103X	C CAP.	0.01μF	50V	K
	C1311	QETN1HM-106Z	E CAP.	10μF	50V	M
	C1312	NDC21HJ-680X	C CAP.	68pF	50V	J
	C1313	QETN1CM-107Z	E CAP.	100μF	16V	M
	C1314	NCB21HK-103X	C CAP.	0.01μF	50V	K
	C1315	QETN1HM-106Z	E CAP.	10μF	50V	M
	C1319	QETN1CM-107Z	E CAP.	100μF	16V	M
	C1320	NCB21HK-103X	C CAP.	0.01μF	50V	K
	C1321-23	NCB21EK-104X	C CAP.	0.1μF	25V	K
	C1324-26	QETN1HM-105Z	E CAP.	1μF	50V	M
	C1327	QETN1HM-475Z	E CAP.	4.7μF	50V	M
	C1328	QETN1CM-107Z	E CAP.	100μF	16V	M
	C1329	QETN1EM-476Z	E CAP.	47μF	25V	M
	C1330	NDC21HJ-390X	C CAP.	39pF	50V	J
	C1331	QETN1HM-105Z	E CAP.	1μF	50V	M
	C1332	NCB21HK-103X	C CAP.	0.01μF	50V	K
	C1333	NCB21EK-104X	C CAP.	0.1μF	25V	K
	C1401	QETN1HM-105Z	E CAP.	1μF	50V	M
	C1403-05	NCB21HK-103X	C CAP.	0.01μF	50V	K
	C1406	QFV71HJ-184Z	MF CAP.	0.18μF	50V	J
	C1407	QFV71HJ-824Z	MF CAP.	0.82μF	50V	J
	C1408	NCB21HK-153X	C CAP.	0.015μF	50V	K
	C1501	QETN1CM-107Z	E CAP.	100μF	16V	M
	C1502-04	NCB21HK-103X	C CAP.	0.01μF	50V	K
	C1505	NCB21HK-332X	C CAP.	3300pF	50V	K
	C1506	QETN1HM-335Z	E CAP.	3.3μF	50V	M
	C1507	NCB21HK-103X	C CAP.	0.01μF	50V	K
	C1508	QETN1CM-108Z	E CAP.	1000μF	16V	M
	C1509	NCB21HK-823X	CHIP CAP.	0.082μF	50V	K
	C1510-11	NCB21HK-103X	C CAP.	0.01μF	50V	K
	C1512	QTMN1HM-105Z	E CAP.	0.1μF	50V	M
	C1513	QETM1CM-228	E CAP.	2200μF	16V	M
	C1514	NCB21HK-103X	C CAP.	0.01μF	50V	K
	C1515	QFV71HJ-394Z	MF CAP.	0.39μF	50V	J
	C1516	NCB21HK-103X	C CAP.	0.01μF	50V	K
	C1571	NCB21HK-103X	C CAP.	0.01μF	50V	K
	C1605	QETN1HM-106Z	E CAP.	10μF	50V	M
	C1606	QETN1EM-227Z	E CAP.	220μF	25V	M
	C1622-23	QETN1CM-227Z	E CAP.	220μF	16V	M
	C1624	QETN1EM-476Z	E CAP.	47μF	25V	M
	C1626	QENC1EM-107Z	BP E CAP.	100μF	25V	M
	C1627	QETM1EM-228	E CAP.	2200μF	25V	M
	C1629	QENC1EM-107Z	BP E CAP.	100μF	25V	M
	C1631	QETN1EM-476Z	E CAP.	47μF	25V	M
	C1632	NCS21HJ-221X	C CAP.	220pF	50V	J
	C1633-34	QFV71HJ-104Z	MF CAP.	0.1μF	50V	J
	C1635-36	QETN1EM-108Z	E CAP.	1000μF	25V	M
	C1637-38	QFV71HJ-104Z	MF CAP.	0.1μF	50V	J
	C1639	QETN1HM-106Z	E CAP.	10μF	50V	M
	C1640	NCS21HJ-221X	C CAP.	220pF	50V	J
	C1641	QETN1HM-226Z	E CAP.	22μF	50V	M
	C1668	NCB21EK-104X	C CAP.	0.1μF	25V	K
	C1671	QETN1CM-107Z	E CAP.	100μF	16V	M
	C1672	NCB21EK-104X	C CAP.	0.1μF	25V	K
	C1701	NCF21CZ-105X	C CAP.	1μF	16V	Z
	C1703	QETN1EM-476Z	E CAP.	47μF	25V	M
	C1704	NCB21EK-104X	C CAP.	0.1μF	25V	K
	C1705	QETN1AM-107Z	E CAP.	100μF	10V	M
	C1706	NCB21EK-104X	C CAP.	0.1μF	25V	K
	C1707	QETN1HM-474Z	E CAP.	0.47μF	50V	M
	C1708	QETN1EM-476Z	E CAP.	47μF	25V	M
	C1709-10	NDC21HJ-9R0X	C CAP.	9.0pF	50V	J
	C1711	NCB21EK-104X	C CAP.	0.1μF	25V	K
	C1712	NDC21HJ-151X	C CAP.	150pF	50V	J

⚠	Symbol No.	Part No.	Part Name	Description		
	C1716-17	QETN1HM-105Z	E CAP.	1μF	50V	M
	C1718	NCB21HK-333X	C CAP.	0.033μF	50V	K
	C1725	NCB21HK-102X	C CAP.	1000pF	50V	K
	C1871	NCB21EK-104X	C CAP.	0.1μF	25V	K
	C1872	NCB21HK-223X	C CAP.	0.022μF	50V	K
	C1873	NDC21HJ-221X	C CAP.	220pF	50V	J
	C1874-75	NDC21HJ-150X	C CAP.	15pF	50V	J
	C1876	NCB21HK-102X	C CAP.	1000pF	50V	K
	C1877	NCB21EK-104X	C CAP.	0.1μF	25V	K
	C1878	NCB21HK-102X	C CAP.	1000pF	50V	K
	C1879	NDC21HJ-180X	C CAP.	18pF	50V	J
	C1880	QETN1AM-477Z	E CAP.	470μF	10V	M
	C1881	NCB21EK-104X	C CAP.	0.1μF	25V	K
	C1882	QETN1EM-476Z	E CAP.	47μF	25V	M
	C1883	NCB21HK-103X	C CAP.	0.01μF	50V	K
	C1884-85	NCB21EK-104X	C CAP.	0.1μF	25V	K
	C1886	NCB21HK-103X	C CAP.	0.01μF	50V	K
	C1887-89	QETN1HM-106Z	E CAP.	10μF	50V	M
⚠	C1901	QFZ9040-474	MF CAP.	0.47μF	AC275V	M

COIL

Symbol No.	Part No.	Part Name	Description
L1001	QQL244K-5R6Z	PEAKING COIL	5.6μH
L1002	QQL244K-270Z	PEAKING COIL	27μH
L1301-02	QQL244K-4R7Z	PEAKING COIL	4.7μH
L1305	QQL244K-4R7Z	PEAKING COIL	4.7μH
L1306	QQL244K-330Z	PEAKING COIL	33μH
L1501	QQL244J-151Z	PEAKING COIL	150μH
L1701	QQL244K-4R7Z	PEAKING COIL	4.7μH
L1702	QQL244K-3R9Z	PEAKING COIL	
L1871	QQL244K-4R7Z	PEAKING COIL	4.7μH

DIODE

Symbol No.	Part No.	Part Name
D1301	MA3051/M/-X	ZENER DIODE
D1302-04	MA111-X	SI.DIODE
D1503	RB100A-T2	SI.DIODE
D1602	MA111-X	SI.DIODE
D1608	MA111-X	SI.DIODE
D1612	MA111-X	SI.DIODE
D1624-25	MA111-X	SI.DIODE
D1701	MA3068/M/-X	ZENER DIODE
D1702	MA111-X	SI.DIODE
D1704	MA111-X	SI.DIODE
D1705	MA3036-X	ZENER DIODE
D1706-08	MA111-X	SI.DIODE
D1710	MA111-X	SI.DIODE

TRANSISTOR

Symbol No.	Part No.	Part Name
Q1301-02	2SA1037AK/QR/-X	SI.TRANSISTOR
Q1308	DTC124EKA-X	DIGI.TRANSISTOR
Q1311	DTC124EKA-X	DIGI.TRANSISTOR
Q1312	2SA1037AK/QR/-X	SI.TRANSISTOR
Q1401	DTC124EKA-X	DIGI.TRANSISTOR
Q1402	2SC2412K/QR/-X	SI.TRANSISTOR
Q1604	2SA1037AK/QR/-X	SI.TRANSISTOR
Q1609	2SA1037AK/QR/-X	SI.TRANSISTOR
Q1610	DTC323TK-X	DIGI.TRANSISTOR
Q1612	DTC323TK-X	DIGI.TRANSISTOR
Q1701-04	2SC2412K/QR/-X	SI.TRANSISTOR
Q1705	2SA1037AK/QR/-X	SI.TRANSISTOR
Q1708	2SA1037AK/QR/-X	SI.TRANSISTOR
Q1709-10	2SC2412K/QR/-X	SI.TRANSISTOR
Q1871	2SA1037AK/QR/-X	SI.TRANSISTOR
Q1872	2SC2412K/QR/-X	SI.TRANSISTOR

IC

Symbol No.	Part No.	Part Name	Description
IC1301	TB1227CN	I C	
IC1302	TC4053BP/N/	I.C.(DIGI-MOS)	
IC1501	AN5441SA-W	I C	
IC1601	LA4446	I.C.(MONO-ANA)	
IC1607	BA05T	I.C.(MONO-ANA)	
IC1701	M37280MK-207SP	I C	
IC1702	AT24C16-24WT5	I.C.	(SERVICE)
IC1703	L78LR05E-MA	I.C.(MONO-ANA)	

⚠	Symbol No.	Part No.	Part Name	Description
	IC			
	IC1871	ET417	I.C.(M)	
	IC1872	ET206	I.C.(M)	
	OTHERS			
		CEMG002-001Z	FUSE CLIP	
	CN1001	QGF1220C2-19	FFC/FPC CONNECTO	
⚠	F1901	QMF51D2-3R15J1	FUSE	3.15A
	K1001	QQR0621-002Z	BEADS CORE	
	K1004	QQR0621-002Z	BEADS CORE	
	K1307	QQR0621-002Z	BEADS CORE	
	K1872	QQL244K-3R3Z	PEAKING COIL	
	LC1301	CE42142-222Z	EMI FILTER	
⚠	LF1901	QQR1095-001	LINE FILTER	
⚠	S1901	QSW0824-001	PUSH SWITCH	POWER SW
	TU1001	QAU0188-003	TUNER	
	X1301	QAX0305-001Z	CRYSTAL	
	X1701	CST8.00MTW	CER.RESONATOR	
	X1871	CE41257-001Z	CRYSTAL	

■ POWER DEF. P.W. BOARD ASS'Y (SJK-2513A-U2)

⚠	Symbol No.	Part No.	Part Name	Description
	RESISTOR			
	R2401	QRE141J-752Y	C R	7.5kΩ 1/4W J
	R2402	QRA14CF-1002Y	MF R	10kΩ 1/4W F
	R2403	QRA14CF-3091Y	MF R	3.09kΩ 1/4W F
	R2404	QRA14CF-8200Y	MF R	820Ω 1/4W F
	R2405	QRA14CF-8200Y	MF R	820Ω 1/4W F
	R2406	QRE141J-752Y	C R	7.5kΩ 1/4W J
	R2409	QRE141J-103Y	C R	10kΩ 1/4W J
	R2410	QRE141J-102Y	C R	1kΩ 1/4W J
	R2414	QRE121J-2R7Y	C R	2.7Ω 1/2W J
	R2415	QRX01GJ-1R8	MF R	1.8Ω 1W J
	R2416	QRG01GJ-820	OM R	82Ω 1W J
	R2417	QRE121J-1R0Y	C R	1.0Ω 1/2W J
	R2461	QRE141J-331Y	C R	330Ω 1/4W J
	R2463	QRE121J-392Y	C R	3.9kΩ 1/2W J
	R2464	QRE121J-562Y	C R	5.6kΩ 1/2W J
	R2465	QRE121J-392Y	C R	3.9kΩ 1/2W J
	R2466	QRE121J-102Y	C R	1kΩ 1/2W J
	R2467	QRL039J-120	OM R	12Ω 3W J
	R2468	QRE121J-472Y	C R	4.7kΩ 1/2W J
	R2492	QRE141J-683Y	C R	68kΩ 1/4W J
	R2493	QRE141J-224Y	C R	220kΩ 1/4W J
	R2495	QRE141J-103Y	C R	10kΩ 1/4W J
	R2496	QRE141J-183Y	C R	18kΩ 1/4W J
	R2497	QRE141J-153Y	C R	15kΩ 1/4W J
	R2502	QRE141J-222Y	C R	2.2kΩ 1/4W J
	R2503	QRE121J-152Y	C R	1.5kΩ 1/2W J
	R2504	QRL039J-102	OM R	1kΩ 3W J
	R2505	QRL039J-122	OM R	1.2kΩ 3W J
	R2521	QRE121J-150Y	C R	15Ω 1/2W J
	R2522	QRL039J-103	OM R	10kΩ 3W J
	R2523	QRE121J-471Y	C R	470Ω 1/2W J
	R2525	QRE141J-332Y	C R	3.3kΩ 1/4W J
	R2541	QRE121J-103Y	C R	10kΩ 1/2W J
	R2542	QRE121J-222Y	C R	2.2kΩ 1/2W J
	R2543	QRE121J-124Y	C R	120kΩ 1/2W J
	R2544	QRE121J-104Y	C R	100kΩ 1/2W J
	R2545	QRE141J-123Y	C R	12kΩ 1/4W J
	R2546	QRE121J-104Y	C R	100kΩ 1/2W J
	R2547	QRE141J-123Y	C R	12kΩ 1/4W J
	R2548	QRE121J-222Y	C R	2.2kΩ 1/2W J
	R2551-52	QRT039J-1R0	MF R	1.0Ω 3W J
	R2553	QRF104K-5R6	UNF R	5.6Ω 10W K
	R2591	QRE121J-103Y	C R	10kΩ 1/2W J
	R2592	QRA14CF-1201Y	MF R	1.2kΩ 1/4W F

⚠	Symbol No.	Part No.	Part Name	Description
	RESISTOR			
	R2593	QRE141J-183Y	C R	18kΩ 1/4W J
	R2594	QRE141J-222Y	C R	2.2kΩ 1/4W J
⚠	R2595	QRA14CF-1692Y	MF R	16.9kΩ 1/4W F
⚠	R2596	QRA14CF-2491Y	MF R	2.49kΩ 1/4W F
	R2597	QRE141J-273Y	C R	27kΩ 1/4W J
⚠	R2902	QRE121J-331Y	C R	330Ω 1/2W J
	R2903	QRF104K-3R9	UNF R	3.9Ω 10W K
	R2904-05	QRE121J-474Y	C R	470kΩ 1/2W J
	R2907-08	QRL039J-823	OM R	82kΩ 3W J
	R2909	QRG039J-683	OM R	68kΩ 3W J
	R2910	QRE121J-681Y	C R	680Ω 1/2W J
	R2911	QRM059J-R15	MP R	0.15Ω 5W J
	R2912	QRT029J-2R2	MF R	2.2Ω 2W J
	R2914	QRE121J-272Y	C R	2.7kΩ 1/2W J
	R2918	QRE121J-332Y	C R	3.3kΩ 1/2W J
	R2933	QRE141J-102Y	C R	1kΩ 1/4W J
	R2935	QRE141J-473Y	C R	47kΩ 1/4W J
	R2936	QRE141J-103Y	C R	10kΩ 1/4W J
	R2938	QRE121J-102Y	C R	1kΩ 1/2W J
	R2940	QRE121J-390Y	C R	39Ω 1/2W J
	R2964	QRE121J-102Y	C R	1kΩ 1/2W J
	R2967	QRL039J-223	OM R	22kΩ 3W J
	R2976	QRL029J-100	OM R	10Ω 2W J
⚠	R2991	QRZ9041-825	C R	8.2MΩ 1/2W K
	CAPACITOR			
	C2401	QEHR1VM-227Z	E CAP.	220μF 35V M
	C2402	QETM1VM-108	E CAP.	1000μF 35V M
	C2403	QFLC2AJ-683Z	M CAP.	0.068μF 100V J
	C2404	QETN1HM-105Z	E CAP.	1μF 50V M
	C2405	QFLC1HJ-472Z	M CAP.	4700pF 50V J
	C2406	QCZ0337-180Z	C CAP.	18pF 2kV J
	C2407	QFLC1HJ-102Z	M CAP.	1000pF 50V J
	C2408	QFV71HJ-334Z	MF CAP.	0.33μF 50V J
	C2410	QFV71HJ-334Z	MF CAP.	0.33μF 50V J
	C2411	QFLC2AJ-563Z	M CAP.	0.056μF 100V J
	C2451	QFV71HJ-104Z	MF CAP.	0.1μF 50V J
	C2461	QEZ0231-475Z	E CAP.	4.7μF 160V M
	C2462	QETN1HM-106Z	E CAP.	10μF 50V M
	C2463	QFLC1HJ-153Z	M CAP.	0.015μF 50V J
	C2491	QETN1HM-105Z	E CAP.	1μF 50V M
	C2492	QETN1HM-106Z	E CAP.	10μF 50V M
	C2502	QCB32HK-681Z	C CAP.	680pF 500V K
	C2503	QEHR2CM-105Z	E CAP.	1μF 160V M
⚠	C2521	QFZ0200-592	MPP CAP.	5900pF1.5kVH ±3%
⚠	C2522	QFZ0200-113	MPP CAP.	0.011μF1.5kVH ±3%
⚠	C2523	QFP32GJ-223	PP CAP.	0.022μF 400V J
⚠	C2524	QFM72DK-104	M CAP.	0.1μF 200V K
⚠	C2525	QFZ0197-354	MPP CAP.	0.35μF 250V J
⚠	C2526	QFZ0197-354	MPP CAP.	0.35μF 250V J
	C2527	QEHR2EM-475Z	E CAP.	4.7μF 250V M
	C2528	QFZ0197-683	MPP CAP.	0.068μF 250V J
	C2529	QFZ0197-104	MPP CAP.	0.1μF 250V J
	C2530	QCB32HK-561Z	C CAP.	560pF 500V K
	C2531	QFLC1HJ-103Z	M CAP.	0.01μF 50V J
	C2532	QFZ0197-334	MPP CAP.	0.33μF 250V J
	C2542	QFZ0197-624	MPP CAP.	0.62μF 250V J
	C2543	QFZ0197-254	MPP CAP.	0.25μF 250V J
	C2551	QETN2EM-106Z	E CAP.	10μF 250V M
	C2552	QCB32HK-152Z	C CAP.	1500pF 500V K
	C2553	QEHR1EM-108Z	E CAP.	1000μF 25V M
	C2554	QCB32HK-152Z	C CAP.	1500pF 500V K
	C2555	QEHR1EM-108Z	E CAP.	1000μF 25V M
	C2560	QETM2CM-227	E CAP.	220μF 160V M
	C2591	QETN1AM-107Z	E CAP.	100μF 10V M
	C2592	QETN1EM-476Z	E CAP.	47μF 25V M
	C2593	QETN2AM-106Z	E CAP.	10μF 100V M
	C2594	QETN1AM-227Z	E CAP.	220μF 10V M
⚠	C2901	QFZ9040-473	MF CAP.	0.047μFAC275V M
⚠	C2904	QCZ9054-472	C CAP.	4700pFAC250V Z
⚠	C2905	QCZ9054-472	C CAP.	4700pFAC250V Z
⚠	C2906	QCZ9054-472	C CAP.	4700pFAC250V M
	C2907	QEZ0199-227	E CAP.	220μF 400V M

CAPACITOR

⚠	Symbol No.	Part No.	Part Name	Description
	C2908	QCB32HK-103	C CAP.	0.01µF 500V K
	C2909	QCZ0122-391	C CAP.	390pF 2kV K
	C2910	QCZ0122-102	C CAP.	1000pF 2kV K
	C2912	QCB31HK-471Z	C CAP.	470pF 50V K
	C2913	QETN1HM-476Z	E CAP.	47µF 50V M
	C2916	QETN1HM-107Z	E CAP.	100µF 50V M
	C2918	QCB31HK-681Z	C CAP.	680pF 50V K
	C2933-34	QETN1HM-106Z	E CAP.	10µF 50V M
	C2935	QETN1EM-227Z	E CAP.	220µF 25V M
	C2951	QCZ0122-561	C CAP.	560pF 2kV K
	C2952	QEZ0203-227	E CAP.	220µF 160V M
	C2953	QCB32HK-391Z	C CAP.	390pF 500V K
	C2954	QTMM1EM-228	E CAP.	2200µF 25V M
	C2955	QCB32HK-391Z	C CAP.	390pF 500V K
	C2956	QTMM1CM-228	E CAP.	2200µF 16V M
	C2958	QCB32HK-391Z	C CAP.	390pF 500V K
	C2959	QETM1VM-228	E CAP.	2200µF 35V M
	C2964	QFV71HJ-684Z	MF CAP.	0.68µF 50V J
	C2968	QCZ0120-104Z	C CAP.	0.1µF 25V Z
	C2969	QEHR1CM-477Z	E CAP.	470µF 16V M
	C2970	QEHR1CM-107Z	E CAP.	100µF 16V M
	C2971	QCZ0120-104Z	C CAP.	0.1µF 25V Z
	C2972	QETN1CM-227Z	E CAP.	220µF 16V M
	C2973	QETN1EM-476Z	E CAP.	47µF 25V M
	C2974	QCZ0120-104Z	C CAP.	0.1µF 25V Z
	C2975	QETN1AM-227Z	E CAP.	220µF 10V M
	C2976	QETN1EM-476Z	E CAP.	47µF 25V M
	C2979	QFV71HJ-104Z	MF CAP.	0.1µF 50V J
⚠	C2991	QCZ9079-332	C CAP.	3300pFAC250V M
⚠	C2992	QCZ9079-471	C CAP.	470pFAC250V K

TRANSFORMER

⚠	Symbol No.	Part No.	Part Name
	T2501	CE42034-002	H.DRIVE TRANSF.
	T2521	CE42549-001J1	BRIGE COIL
⚠	T2551	QQH0093-001	FB TRANSF.
⚠	T2901	QQS0099-001	SW TRANSF.
⚠	T2921	QQT0303-001	POWER TRANSF.

COIL

⚠	Symbol No.	Part No.	Part Name	Description
	L2461	QQLZ028-472	CHOKE COIL	
	L2521	QQLZ028-101	CHOKE COIL	
	L2522	QQR1137-003	LINEARITY COIL	
	L2551	QQLZ026-340	HEATER CHOKE	
	L2901-02	QQL402K-100	COIL	10µH
⚠	L2903	QQR0659-004	CHOKE COIL	
	L2951	QQLZ026-460	HEATER CHOKE	
	L2952	QQL26AK-820Z	CHOKE COIL	
	L2953-54	QQL26AM-5R6Z	CHOKE COIL	

DIODE

⚠	Symbol No.	Part No.	Part Name
	D2401	MTZJ75-T2	ZENER DIODE
	D2402	1N4003-T2	SI.DIODE
	D2403	1SS133-T2	SI.DIODE
	D2451	BYD33D-T3	SI.DIODE
	D2491	BYD33D-T3	SI.DIODE
	D2492	MTZJ22B-T2	ZENER DIODE
	D2493-94	1SS133-T2	SI.DIODE
	D2521	RH3G-F1	SI.DIODE
	D2522	BYW95B-20	SI.DIODE
	D2523	BYD33G-T3	SI.DIODE
	D2525	MTZJ9.1B-T2	ZENER DIODE
	D2551	BYD33G-T3	SI.DIODE
	D2553-54	BYW95B-20	SI.DIODE
	D2591	MTZJ15B-T2	ZENER DIODE
	D2592	MTZJ7.5B-T2	ZENER DIODE
	D2593	BYD33D-T3	SI.DIODE
	D2594	MTZJ7.5S-T2	ZENER DIODE
⚠	D2901	D3SBA60	DIODE BRIDGE
	D2902	BYD33M-T3	SI.DIODE
	D2904-05	BYD33D-T3	SI.DIODE
	D2909	1SS133-T2	SI.DIODE
	D2911	MTZJ15B-T2	ZENER DIODE
	D2913	MTZJ27B-T2	ZENER DIODE

DIODE

⚠	Symbol No.	Part No.	Part Name
	D2931	1SS133-T2	SI.DIODE
	D2934	MTZJ6.2B-T2	ZENER DIODE
	D2935-38	1N4003-T2	SI.DIODE
	D2939	1SS133-T2	SI.DIODE
	D2951	RU4B-F1	SI.DIODE
	D2953-54	BYW95B-20	SI.DIODE
	D2955	FMX-G12S	SI.DIODE
	D2958	1SR35-400A-T2	SI.DIODE
	D2963	MTZJ3.9B-T2	ZENER DIODE
	D2964	MTZJ33B-T2	ZENER DIODE
	D2981-83	1SS133-T2	SI.DIODE
	D2985	MTZJ7.5C-T2	ZENER DIODE

TRANSISTOR

⚠	Symbol No.	Part No.	Part Name	Description
	Q2402	2SC1740S/QR/-T	SI.TRANSISTOR	
	Q2461	2SD1408/OY/-LB	SI.TRANSISTOR	
	Q2462-63	2SA933AS/QR/-T	SI.TRANSISTOR	
	Q2501	BSN304-T	F.E.T.	
⚠	Q2521	2SD2634-YD	SI.TRANSISTOR	H.OUT
	Q2541-42	DTC124ESA-T	DIGI.TRANSISTOR	
	Q2543	IRF620	F.E.T.	
	Q2544-45	2SK2459N-F54	F.E.T.	
	Q2546	DTC124ESA-T	DIGI.TRANSISTOR	
	Q2591	2SA949/Y/Z1-T	SI.TRANSISTOR	
	Q2592	DTC124ESA-T	DIGI.TRANSISTOR	
	Q2593	2SC1740S/QR/-T	SI.TRANSISTOR	
	Q2931-32	2SC1740S/QR/-T	SI.TRANSISTOR	
	Q2933	2SC2655/Y/-T	SI.TRANSISTOR	

IC

⚠	Symbol No.	Part No.	Part Name
	IC2401	LA7841	I.C.(MONO-ANA)
⚠	IC2901	STR-F6667B/F7	I C
	IC2951	SE140N	I.C.(HYBRID)
	IC2952	BA12T	I.C.(MONO-ANA)
	IC2953	BA17809T	I.C.(MONO-ANA)
	IC2954	BA05T	I.C.(MONO-ANA)

OTHERS

⚠	Symbol No.	Part No.	Part Name	Description
⚠	CP2952	ICP-N50-Y	I.C.PROTECT	
⚠	CP2953	ICP-N75-Y	I.C.PROTECT	
⚠	CP2956	ICP-N10-Y	I.C.PROTECT	
⚠	CP2957	ICP-N5-Y	I.C.PROTECT	
	K2401	QQR0621-002Z	BEADS CORE	
	K2503-04	QQR0582-001Z	BEADS CORE	
	K2901	QQR0679-001	FERRITE BEADS	
	K2904	QQR0679-001	FERRITE BEADS	
	K2951	QQR0872-001Y	FERRITE BEADS	
	K2952-54	QQR0621-002Z	BEADS CORE	
⚠	LF2901	QQR1095-001	LINE FILTER	
	PC2541-42	PC123F2	I.C.(PH.COUPLER)	
⚠	PC2901	PC123FY2	I.C.(PH.COUPLER)	
⚠	R2494	QRZ9017-4R7	F R	4.7Ω 1/4W J
⚠	R2524	QRZ9017-4R7	F R	4.7Ω 1/4W J
⚠	R2555	QRZ9011-4R7	F R	4.7Ω 1/2W J
⚠	R2913	QRZ9017-100	F R	10Ω 1/4W J
⚠	RY2931	QSK0099-001	RELAY	
⚠	TH2901	QAD0120-9R0	P THERMISTOR	

■ CRT SOCKET P.W. BOARD ASS'Y (SJK-3513A-U2)

⚠	Symbol No.	Part No.	Part Name	Description
	RESISTOR			
	R3101-03	NRSA02J-101X	MG R	100Ω 1/10W J
	R3107-09	NRSA02J-392X	MG R	3.9kΩ 1/10W J
	R3110-12	NRSA02J-221X	MG R	220Ω 1/10W J
	R3113-15	NRSA02J-470X	MG R	47Ω 1/10W J
	R3116-18	QRL029J-153	OM R	15kΩ 2W J
	R3119-21	QRL029J-183	OM R	18kΩ 2W J
	R3125-27	QRZ0107-102Z	C R	1kΩ 1/2W K
	R3130	QRG01GJ-101	OM R	100Ω 1W J
	R3135	QRZ0107-474Z	C R	470kΩ 1/2W K
	R3136	QRE121J-474Y	C R	470kΩ 1/2W J
	R3137	QRZ0107-102Z	C R	1kΩ 1/2W K
	R3138	QRE121J-105Y	C R	1MΩ 1/2W J
	R3151	NRSA02J-102X	MG R	1kΩ 1/10W J
	R3152	NRSA02J-472X	MG R	4.7kΩ 1/10W J
	R3154	NRSA02J-0R0X	MG R	0.0Ω 1/10W J
	CAPACITOR			
	C3101-03	NDC21HJ-391X	C CAP.	390pF 50V J
	C3104	QETN1CM-107Z	E CAP.	100μF 16V M
	C3105	QETN1EM-476Z	E CAP.	47μF 25V M
	C3107	QETN1HM-106Z	E CAP.	10μF 50V M
	C3113	QCZ0131-222	C CAP.	2200pF 2000V K
	C3114	QETM2EM-336	E CAP.	33μF 250V M
	C3115	QETM2EM-106	E CAP.	10μF 250V M
	C3116	NRSA02J-0R0X	MG R	0.0Ω 1/10W J
	DIODE			
	D3151	MA111-X	SI.DIODE	
	D3153-55	MA111-X	SI.DIODE	
	D3156	MA3047/H/-X	ZENER DIODE	
	D3163	MA3150/M/-X	ZENER DIODE	
	D3164	1SR35-400A-T2	SI.DIODE	
	TRANSISTOR			
	Q3101-03	2SC1740S/QR/-T	SI.TRANSISTOR	
	Q3104-06	2SC4544-LB	SI.TRANSISTOR	
	Q3151	2SA1037AK/QR/-X	SI.TRANSISTOR	
	Q3152	2SC4682-T	SI.TRANSISTOR	
	OTHERS			
	K3101	QQR0621-002Z	BEADS CORE	
⚠	SK3001	CE42535-001J1	C.R.T.SOCKET	

■ FRONT CONTROL P.W. BOARD ASS'Y (SJK-8513A-U2)

⚠	Symbol No.	Part No.	Part Name	Description
	RESISTOR			
	R8301	NRSA02J-750X	MG R	75Ω 1/10W J
	R8801-02	NRSA02J-561X	MG R	560Ω 1/10W J
	R8807-09	NRSA02J-103X	MG R	10kΩ 1/10W J
	R8810-11	QRE121J-271Y	C R	270Ω 1/2W J
	R8812-13	NRSA02J-102X	MG R	1kΩ 1/10W J
	R8851	NRSA02J-682X	MG R	6.8kΩ 1/10W J
	R8861	NRSA02J-562X	MG R	5.6kΩ 1/10W J
	R8863	NRSA02J-472X	MG R	4.7kΩ 1/10W J
	R8864	NRSA02J-222X	MG R	2.2kΩ 1/10W J
	CAPACITOR			
	C8301-02	NCB21HK-472X	C CAP.	4700pF 50V K
	C8303	NRSA02J-0R0X	MG R	0.0Ω 1/10W J
	C8801-02	NCB21HK-104X	CHIP CAP.	0.1μF 50V K
	C8805	NCB21HK-103X	C CAP.	0.01μF 50V K
	C8851	NCB21EK-104X	C CAP.	0.1μF 25V K
	C8852	QETN1CM-107Z	E CAP.	100μF 16V M
	C8861	QETN1HM-106Z	E CAP.	10μF 50V M
	COIL			
	L8301	QQL244K-270Z	PEAKING COIL	27μH
	L8302	QQR0716-001Z	LEAD CORE	
	L8303	QQL244K-270Z	PEAKING COIL	27μH
	L8801-02	QQL244K-5R6Z	PEAKING COIL	5.6μH
	L8803	QQR0716-001Z	LEAD CORE	
	DIODE			
	D8801	SPR-39MVWF	L.E.D.	
	D8805	MA111-X	SI.DIODE	
	D8851	MA3068/M/-X	ZENER DIODE	
	D8861	MA111-X	SI.DIODE	
	D8862	P1241-04	C.D.S.	
	TRANSISTOR			
	Q8801-02	DTA124EKA-X	DIGI.TRANSISTOR	
	Q8861	2SA1037AK/QR/-X	SI.TRANSISTOR	
	IC			
	IC8851	GP1U281Q	IFR DETECT UNIT	
	OTHERS			
		LC30349-001A-H	L.E.D.HOLDER	
		CM35921-005-H	CDS HOLDER	
	J8301	QND0073-001	S JACK	
	J8302	QNN0370-001	PIN JACK	
	J8801	QMS3004-C01	HEADPHONE JACK	
	S8801	QSW0619-003Z	PUSH SWITCH	VR
	S8802	QSW0619-003Z	PUSH SWITCH	▽(DOWN)
	S8803	QSW0619-003Z	PUSH SWITCH	△(UP)
	Y8302	NCB21HK-472X	C CAP.	4700pF 50V K

■AV SW P.W. BOARD ASS'Y (SJK0S713A-U2)

RESISTOR

⚠ Symbol No.	Part No.	Part Name	Description
R0101-08	NRSA02J-750X	MG R	75Ω 1/10W J
R0110	NRSA02J-823X	MG R	82kΩ 1/10W J
R0112	NRSA02J-823X	MG R	82kΩ 1/10W J
R0113	NRSA02J-750X	MG R	75Ω 1/10W J
R0114	NRSA02J-473X	MG R	47kΩ 1/10W J
R0115-16	NRSA02J-223X	MG R	22kΩ 1/10W J
R0117-18	NRSA02J-823X	MG R	82kΩ 1/10W J
R0119-20	NRSA02J-391X	MG R	390Ω 1/10W J
R0123	NRSA02J-104X	MG R	100kΩ 1/10W J
R0124-25	NRSA02J-101X	MG R	100Ω 1/10W J
R0126	NRSA02J-333X	MG R	33kΩ 1/10W J
R0127	NRSA02J-101X	MG R	100Ω 1/10W J
R0128	NRSA02J-103X	MG R	10kΩ 1/10W J
R0129	NRSA02J-823X	MG R	82kΩ 1/10W J
R0130	NRSA02J-473X	MG R	47kΩ 1/10W J
R0131	NRSA02J-273X	MG R	27kΩ 1/10W J
R0132	NRSA02J-153X	MG R	15kΩ 1/10W J
R0133	NRSA02J-222X	MG R	2.2kΩ 1/10W J
R0134	NRSA02J-333X	MG R	33kΩ 1/10W J
R0135	NRSA02J-222X	MG R	2.2kΩ 1/10W J
R0136-37	NRSA02J-333X	MG R	33kΩ 1/10W J
R0138	NRSA02J-473X	MG R	47kΩ 1/10W J
R0139	NRSA02J-823X	MG R	82kΩ 1/10W J
R0140	NRSA02J-103X	MG R	10kΩ 1/10W J
R0141	NRSA02J-153X	MG R	15kΩ 1/10W J
R0142	NRSA02J-223X	MG R	22kΩ 1/10W J
R0143	NRSA02J-473X	MG R	47kΩ 1/10W J
R0144	NRSA02J-273X	MG R	27kΩ 1/10W J
R0146	NRSA02J-391X	MG R	390Ω 1/10W J
R0148	NRSA02J-391X	MG R	390Ω 1/10W J
R0151	NRSA02J-104X	MG R	100kΩ 1/10W J
R0152	NRSA02J-222X	MG R	2.2kΩ 1/10W J
R0153	NRSA02J-333X	MG R	33kΩ 1/10W J
R0154	NRSA02J-222X	MG R	2.2kΩ 1/10W J
R0155	NRSA02J-333X	MG R	33kΩ 1/10W J
R0156-69	NRSA02J-101X	MG R	100Ω 1/10W J
R0170	NRSA02J-333X	MG R	33kΩ 1/10W J
R0171	NRSA02J-222X	MG R	2.2kΩ 1/10W J
R0172	NRSA02J-473X	MG R	47kΩ 1/10W J
R0173	NRSA02J-823X	MG R	82kΩ 1/10W J
R0174	NRSA02J-103X	MG R	10kΩ 1/10W J
R0175	NRSA02J-153X	MG R	15kΩ 1/10W J
R0176	NRSA02J-473X	MG R	47kΩ 1/10W J
R0177	NRSA02J-273X	MG R	27kΩ 1/10W J
R0180-83	NRSA02J-101X	MG R	100Ω 1/10W J
R0184	NRSA02J-333X	MG R	33kΩ 1/10W J
R0185	NRSA02J-222X	MG R	2.2kΩ 1/10W J
R0186	NRSA02J-333X	MG R	33kΩ 1/10W J
R0188	NRSA02J-101X	MG R	100Ω 1/10W J
R0189-90	NRSA02J-221X	MG R	220Ω 1/10W J
R0191-92	NRSA02J-562X	MG R	5.6kΩ 1/10W J
R0193-94	NRSA02J-102X	MG R	1kΩ 1/10W J
R0195	QRG01GJ-101	OM R	100Ω 1W J
R0197	QRK126J-181X	C R	180Ω 1/2W J
R0198	NRSA02J-750X	MG R	75Ω 1/10W J
R0199	NRSA02J-101X	MG R	100Ω 1/10W J
R0202	QRK126J-151X	C R	150Ω 1/2W J
R0203-05	NRSA02J-750X	MG R	75Ω 1/10W J
R0207	NRSA02J-222X	MG R	2.2kΩ 1/10W J
R0208	NRSA02J-333X	MG R	33kΩ 1/10W J
R0209	NRSA02J-222X	MG R	2.2kΩ 1/10W J
R0210	NRSA02J-333X	MG R	33kΩ 1/10W J
R0211-12	NRSA02J-103X	MG R	10kΩ 1/10W J
R0603	NRSA02J-102X	MG R	1kΩ 1/10W J
R0606	QRG01GJ-181	OM R	180Ω 1W J
R0607	NRSA02J-123X	MG R	12kΩ 1/10W J
R0608	NRSA02J-181X	MG R	180Ω 1/10W J
R0609	NRSA02J-123X	MG R	12kΩ 1/10W J
R0610	NRSA02J-122X	MG R	1.2kΩ 1/10W J
R0614	NRSA02J-103X	MG R	10kΩ 1/10W J
R0615	NRSA02J-101X	MG R	100Ω 1/10W J
R0617	NRSA02J-102X	MG R	1kΩ 1/10W J

RESISTOR

⚠ Symbol No.	Part No.	Part Name	Description
R0618	NRSA02J-332X	MG R	3.3kΩ 1/10W J
R0620	NRSA02J-333X	MG R	33kΩ 1/10W J
R0622	NRSA02J-103X	MG R	10kΩ 1/10W J
R0623	NRSA02J-102X	MG R	1kΩ 1/10W J
R0624	NRSA02J-104X	MG R	100kΩ 1/10W J
R0628	NRSA02J-0R0X	MG R	0.0Ω 1/10W J
R0629-31	NRSA02J-101X	MG R	100Ω 1/10W J
R0632	NRSA02J-332X	MG R	3.3kΩ 1/10W J
R0633	NRSA02J-221X	MG R	220Ω 1/10W J
R0634-35	NRSA02J-332X	MG R	3.3kΩ 1/10W J
R0647-48	NRSA02J-101X	MG R	100Ω 1/10W J
R0651	NRSA02J-122X	MG R	1.2kΩ 1/10W J

CAPACITOR

Symbol No.	Part No.	Part Name	Description
C0101	NDC21HJ-151X	C CAP.	150pF 50V J
C0102	QETN1CM-477Z	E CAP.	470μF 16V M
C0103-05	QETN1HM-106Z	E CAP.	10μF 50V M
C0106	NCB21HK-472X	C CAP.	4700pF 50V K
C0107	NCB21HK-152X	C CAP.	1500pF 50V K
C0108	NCB21HK-472X	C CAP.	4700pF 50V K
C0109	NCB21HK-152X	C CAP.	1500pF 50V K
C0110	QETN1CM-477Z	E CAP.	470μF 16V M
C0111-12	NCB21HK-472X	C CAP.	4700pF 50V K
C0113	NDC21HJ-151X	C CAP.	150pF 50V J
C0114-15	NCB21HK-472X	C CAP.	4700pF 50V K
C0116-17	QETN1HM-106Z	E CAP.	10μF 50V M
C0118	NCB21HK-102X	C CAP.	1000pF 50V K
C0119	QETN1HM-105Z	E CAP.	1μF 50V M
C0120	QETN1HM-106Z	E CAP.	10μF 50V M
C0121	QETN1HM-105Z	E CAP.	1μF 50V M
C0122	NCB21HK-103X	C CAP.	0.01μF 50V K
C0123	NCB21HK-102X	C CAP.	1000pF 50V K
C0124-25	QETN1HM-106Z	E CAP.	10μF 50V M
C0126	QETN1HM-105Z	E CAP.	1μF 50V M
C0127	QETN1HM-106Z	E CAP.	10μF 50V M
C0128	QETN1HM-105Z	E CAP.	1μF 50V M
C0129	QETN1HM-106Z	E CAP.	10μF 50V M
C0130	QETN1HM-105Z	E CAP.	1μF 50V M
C0131	NCB21HK-102X	C CAP.	1000pF 50V K
C0132	QETN1HM-105Z	E CAP.	1μF 50V M
C0133	NCB21HK-103X	C CAP.	0.01μF 50V K
C0136	QETN1HM-106Z	E CAP.	10μF 50V M
C0137	QENC1EM-106Z	BP E CAP.	10μF 25V M
C0139	QENC1EM-106Z	BP E CAP.	10μF 25V M
C0140	QETN1CM-107Z	E CAP.	100μF 16V M
C0141	NCB21HK-103X	C CAP.	0.01μF 50V K
C0142	QENC1HM-105Z	BP E CAP.	1μF 50V M
C0143	QENC1EM-106Z	BP E CAP.	10μF 25V M
C0144	QENC1HM-105Z	BP E CAP.	1μF 50V M
C0145-46	QETN1CM-107Z	E CAP.	100μF 16V M
C0147	QETN1CM-477Z	E CAP.	470μF 16V M
C0149	NCB21HK-103X	C CAP.	0.01μF 50V K
C0150-51	QETN1HM-106Z	E CAP.	10μF 50V M
C0152-53	QETN1HM-105Z	E CAP.	1μF 50V M
C0154-55	NDC21HJ-680X	C CAP.	68pF 50V J
C0157-58	NDC21HJ-680X	C CAP.	68pF 50V J
C0159	NDC21HJ-561X	C CAP.	560pF 50V J
C0160	NDC21HJ-102X	C CAP.	1000pF 50V J
C0161	NDC21HJ-680X	C CAP.	68pF 50V J
C0610	NDC21HJ-821X	C CAP.	820pF 50V J
C0611-12	NDC21HJ-470X	C CAP.	47pF 50V J
C0614	NDC21HJ-180X	C CAP.	18pF 50V J
C0616	QETN1CM-107Z	E CAP.	100μF 16V M
C0617	NCB21EK-104X	C CAP.	0.1μF 25V K
C0618	QETN1HM-106Z	E CAP.	10μF 50V M
C0619	NCB21EK-104X	C CAP.	0.1μF 25V K
C0620	QETN1HM-106Z	E CAP.	10μF 50V M
C0621-22	QENC1HM-105Z	BP E CAP.	1μF 50V M
C0623	NCB21EK-104X	C CAP.	0.1μF 25V K
C0624	QETN1HM-106Z	E CAP.	10μF 50V M
C0625	QETN1CM-227Z	E CAP.	220μF 16V M
C0626	NCB21HK-153X	C CAP.	0.015μF 50V K

⚠ Symbol No.	Part No.	Part Name	Description		
CAPACITOR					
C0627	QENC1HM-105Z	BP E CAP.	1µF	50V	M
C0628	NCB21HK-223X	C CAP.	0.022µF	50V	K
C0629	QETN1HM-106Z	E CAP.	10µF	50V	M
C0630-31	NCB21HK-102X	C CAP.	1000pF	50V	K
C0632	NCB21EK-104X	C CAP.	0.1µF	25V	K
C0633	QETN1HM-106Z	E CAP.	10µF	50V	M
C0634-35	NCB21HK-103X	C CAP.	0.01µF	50V	K
C0636	NDC21HJ-2R0X	C CAP.	2.0pF	50V	J
C0637	NCB21HK-222X	C CAP.	2200pF	50V	K
C0638	QETN1CM-336Z	E CAP.	33µF	16V	M
C0639	NCB21HK-153X	C CAP.	0.015µF	50V	K
C0640	NCB21HK-223X	C CAP.	0.022µF	50V	K
C0641	NCB21HK-222X	C CAP.	2200pF	50V	K
C0642	NDC21HJ-2R0X	C CAP.	2.0pF	50V	J
C0643	QENC1HM-105Z	BP E CAP.	1µF	50V	M
C0645	NCB21HK-103X	C CAP.	0.01µF	50V	K
C0646	NCB21EK-104X	C CAP.	0.1µF	25V	K
C0647	QETN1CM-107Z	E CAP.	100µF	16V	M
C0648	NCB21EK-104X	C CAP.	0.1µF	25V	K
C0659-60	QENC1HM-105Z	BP E CAP.	1µF	50V	M
C0677-78	NCB21HK-102X	C CAP.	1000pF	50V	K
COIL					
L0114	QQR0716-001Z	LEAD CORE			
L0601	QQL244K-220Z	PEAKING COIL	22µH		
L0602	QQL244K-180Z	PEAKING COIL	18µH		
L0604	QQL244K-100Z	PEAKING COIL	10µH		
L0605	QQL244K-4R7Z	PEAKING COIL	4.7µH		
DIODE					
D0101-13	MA3120/M/-X	ZENER DIODE			
D0601	RD8.2E/B2/-T2	ZENER DIODE			
TRANSISTOR					
Q0101	DTC323TK-X	DIGI.TRANSISTOR			
Q0102	2SA1037AK/QR/-X	SI.TRANSISTOR			
Q0103	DTC323TK-X	DIGI.TRANSISTOR			
Q0104-07	2SC2412K/QR/-X	SI.TRANSISTOR			
Q0108	2SA1037AK/QR/-X	SI.TRANSISTOR			
Q0109-10	DTC323TK-X	DIGI.TRANSISTOR			
Q0111-12	2SC2412K/QR/-X	SI.TRANSISTOR			
Q0116	2SA933AS/QR/-T	SI.TRANSISTOR			
Q0118	2SC1740S/QR/-T	SI.TRANSISTOR			
Q0119-20	2SC2412K/QR/-X	SI.TRANSISTOR			
Q0601	2SC2412K/QR/-X	SI.TRANSISTOR			
Q0602	DTC323TK-X	DIGI.TRANSISTOR			
Q0603	2SA1037AK/QR/-X	SI.TRANSISTOR			
IC					
IC0101	CXA2089Q-X	I C			
IC0602	BA4558F-X	I.C.(MONO-ANA)			
IC0603	MSP3415DQGB3GHX	IC			
OTHERS					
J0001	QNZ0465-001	PIN CONNECTOR			
J0002	QNZ0463-001	PIN CONNECTOR			
K0101-04	CE42681-001Y	BEADS CORE			
K0601	QQR0621-002Z	BEADS CORE			
LC0601-02	CE42482-103Y	EMI FILTER			
X0601	CE42546-001Z	CRYSTAL			

AV24WT5EKS

PRINTED WIRING BOARD PARTS LIST

■MAIN P.W. BOARD ASS'Y (SJK-1913A-U2)

⚠ Symbol No.	Part No.	Part Name	Description
RESISTOR			
R1001	NRSA02J-102X	MG R	1kΩ 1/10W J
R1004-06	NRSA02J-102X	MG R	1kΩ 1/10W J
R1007	NRSA02J-104X	MG R	100kΩ 1/10W J
R1008	NRSA02J-0R0X	MG R	0.0Ω 1/10W J
R1304	QRG01GJ-121	OM R	120Ω 1W J
R1305	NRSA02J-562X	MG R	5.6kΩ 1/10W J
R1306	NRSA02J-222X	MG R	2.2kΩ 1/10W J
R1307	NRSA02J-102X	MG R	1kΩ 1/10W J
R1308	NRSA02J-471X	MG R	470Ω 1/10W J
R1309	NRSA02J-222X	MG R	2.2kΩ 1/10W J
R1310-11	NRSA02J-391X	MG R	390Ω 1/10W J
R1312-13	NRSA02J-101X	MG R	100Ω 1/10W J
R1314	NRSA02J-562X	MG R	5.6kΩ 1/10W J
R1316	NRSA02J-224X	MG R	220kΩ 1/10W J
R1317	NRSA02J-101X	MG R	100Ω 1/10W J
R1318-21	NRSA02J-102X	MG R	1kΩ 1/10W J
R1327	NRSA02J-0R0X	MG R	0.0Ω 1/10W J
R1328-29	NRSA02J-102X	MG R	1kΩ 1/10W J
R1330	NRSA02J-472X	MG R	4.7kΩ 1/10W J
R1331	NRSA02J-333X	MG R	33kΩ 1/10W J
R1332-33	NRSA02J-222X	MG R	2.2kΩ 1/10W J
R1335	NRSA02J-273X	MG R	27kΩ 1/10W J
R1340-41	NRSA02J-333X	MG R	33kΩ 1/10W J
R1342	NRSA02J-152X	MG R	1.5kΩ 1/10W J
R1343	NRSA02J-272X	MG R	2.7kΩ 1/10W J
R1344	NRSA02J-471X	MG R	470Ω 1/10W J
R1345	NRSA02J-102X	MG R	1kΩ 1/10W J
R1346	NRSA02J-223X	MG R	22kΩ 1/10W J
R1401-02	NRSA02J-103X	MG R	10kΩ 1/10W J
R1403	NRSA02J-102X	MG R	1kΩ 1/10W J
R1404	NRSA02J-183X	MG R	18kΩ 1/10W J
R1405	NRSA02J-223X	MG R	22kΩ 1/10W J
R1409	NRSA02J-0R0X	MG R	0.0Ω 1/10W J
R1411	NRVA02D-473X	MF R	47kΩ 1/10W D
R1413	NRVA02D-223X	MF R	22kΩ 1/10W D
R1414	NRVA02D-101X	MF R	100Ω 1/10W D
R1415	NRSA02J-562X	MG R	5.6kΩ 1/10W J
R1416	NRSA02J-101X	MG R	100Ω 1/10W J
R1417	NRSA02J-223X	MG R	22kΩ 1/10W J
R1418	NRSA02J-153X	MG R	15kΩ 1/10W J
R1419	NRSA02J-102X	MG R	1kΩ 1/10W J
R1420	NRSA02J-183X	MG R	18kΩ 1/10W J
R1501	NRSA02J-621X	MG R	620Ω 1/10W J
R1502	NRSA02J-103X	MG R	10kΩ 1/10W J
R1503	NRSA02J-104X	MG R	100kΩ 1/10W J
R1504	NRSA02J-822X	MG R	8.2kΩ 1/10W J
R1505-06	NRSA02J-221X	MG R	220Ω 1/10W J
R1507	NRSA02J-102X	MG R	1kΩ 1/10W J
R1508-09	NRSA02J-223X	MG R	22kΩ 1/10W J
R1511	NRSA02J-0R0X	MG R	0.0Ω 1/10W J
R1514	NRSA02J-472X	MG R	4.7kΩ 1/10W J
R1516	NRSA02J-222X	MG R	2.2kΩ 1/10W J
R1517	NRSA02J-472X	MG R	4.7kΩ 1/10W J
R1518	NRSA02J-682X	MG R	6.8kΩ 1/10W J
R1519	NRSA02J-562X	MG R	5.6kΩ 1/10W J
R1520	NRSA02J-152X	MG R	1.5kΩ 1/10W J
R1571	NRSA02J-101X	MG R	100Ω 1/10W J
R1572	NRSA02J-133X	MG R	13kΩ 1/10W J
R1573	NRSA02J-821X	MG R	820Ω 1/10W J
R1608-09	NRSA02J-822X	MG R	8.2kΩ 1/10W J
R1610-11	NRSA02J-103X	MG R	10kΩ 1/10W J
R1633	NRSA02J-273X	MG R	27kΩ 1/10W J
R1635	NRSA02J-561X	MG R	560Ω 1/10W J
R1638	NRSA02J-473X	MG R	47kΩ 1/10W J
R1639	NRSA02J-103X	MG R	10kΩ 1/10W J
R1642	QRK126J-4R7X	C R	4.7Ω 1/2W J
R1644	NRSA02J-561X	MG R	560Ω 1/10W J

⚠ Symbol No.	Part No.	Part Name	Description
RESISTOR			
R1645	QRK126J-4R7X	C R	4.7Ω 1/2W J
R1648	NRSA02J-104X	MG R	100kΩ 1/10W J
R1690	QRG01GJ-270	OM R	27Ω 1W J
R1701	NRSA02J-221X	MG R	220Ω 1/10W J
R1703	NRSA02J-273X	MG R	27kΩ 1/10W J
R1704	NRSA02J-473X	MG R	47kΩ 1/10W J
R1705	NRSA02J-102X	MG R	1kΩ 1/10W J
R1706	NRSA02J-223X	MG R	22kΩ 1/10W J
R1707-10	NRSA02J-103X	MG R	10kΩ 1/10W J
R1713-14	NRSA02J-102X	MG R	1kΩ 1/10W J
R1716	NRSA02J-102X	MG R	1kΩ 1/10W J
R1717	NRSA02J-104X	MG R	100kΩ 1/10W J
R1718-19	NRSA02J-682X	MG R	6.8kΩ 1/10W J
R1720	NRSA02J-472X	MG R	4.7kΩ 1/10W J
R1722	NRSA02J-472X	MG R	4.7kΩ 1/10W J
R1724-25	NRSA02J-472X	MG R	4.7kΩ 1/10W J
R1727	NRSA02J-472X	MG R	4.7kΩ 1/10W J
R1729-31	NRSA02J-221X	MG R	220Ω 1/10W J
R1740	NRSA02J-331X	MG R	330Ω 1/10W J
R1745	NRSA02J-472X	MG R	4.7kΩ 1/10W J
R1747	NRSA02J-472X	MG R	4.7kΩ 1/10W J
R1748-52	NRSA02J-221X	MG R	220Ω 1/10W J
R1753	NRSA02J-102X	MG R	1kΩ 1/10W J
R1755	NRSA02J-102X	MG R	1kΩ 1/10W J
R1756	NRSA02J-103X	MG R	10kΩ 1/10W J
R1759	NRSA02J-472X	MG R	4.7kΩ 1/10W J
R1763	NRSA02J-103X	MG R	10kΩ 1/10W J
R1764-66	NRSA02J-221X	MG R	220Ω 1/10W J
R1767	NRSA02J-103X	MG R	10kΩ 1/10W J
R1770	NRSA02J-272X	MG R	2.7kΩ 1/10W J
R1771-73	NRSA02J-222X	MG R	2.2kΩ 1/10W J
R1774-75	NRSA02J-333X	MG R	33kΩ 1/10W J
R1777-79	NRSA02J-222X	MG R	2.2kΩ 1/10W J
R1780	NRSA02J-102X	MG R	1kΩ 1/10W J
R1784-85	NRSA02J-223X	MG R	22kΩ 1/10W J
R1786	NRSA02J-473X	MG R	47kΩ 1/10W J
R1787	NRSA02J-332X	MG R	3.3kΩ 1/10W J
R1788	NRSA02J-272X	MG R	2.7kΩ 1/10W J
R1789	NRSA02J-473X	MG R	47kΩ 1/10W J
R1790	NRSA02J-682X	MG R	6.8kΩ 1/10W J
R1801	NRSA02J-333X	MG R	33kΩ 1/10W J
R1802	NRSA02J-222X	MG R	2.2kΩ 1/10W J
R1805	NRSA02J-332X	MG R	3.3kΩ 1/10W J
R1806	NRSA02J-184X	MG R	180kΩ 1/10W J
R1871	NRSA02J-102X	MG R	1kΩ 1/10W J
R1872-73	NRSA02J-222X	MG R	2.2kΩ 1/10W J
R1874	NRSA02J-272X	MG R	2.7kΩ 1/10W J
R1875	NRSA02J-104X	MG R	100kΩ 1/10W J
R1876	NRSA02J-102X	MG R	1kΩ 1/10W J
R1877	NRSA02J-393X	MG R	39kΩ 1/10W J
R1878-80	NRSA02J-152X	MG R	1.5kΩ 1/10W J
R1881-82	NRSA02J-331X	MG R	330Ω 1/10W J
R1883	NRSA02J-102X	MG R	1kΩ 1/10W J
R1884	NRSA02J-331X	MG R	330Ω 1/10W J
CAPACITOR			
C1001	NCB21HK-222X	C CAP.	2200pF 50V K
C1003	NCB21EK-104X	C CAP.	0.1μF 25V K
C1004	QETN1CM-108Z	E CAP.	1000μF 16V M
C1005	QETN1CM-107Z	E CAP.	100μF 16V M
C1006	QETN1HM-106Z	E CAP.	10μF 50V M
C1007	NCB21HK-104X	CHIP CAP.	0.1μF 50V K
C1008	QETN1HM-106Z	E CAP.	10μF 50V M
C1009	NCB21EK-104X	C CAP.	0.1μF 25V K
C1010	QETN1CM-107Z	E CAP.	100μF 16V M
C1301	NCB21EK-104X	C CAP.	0.1μF 25V K

CAPACITOR

⚠	Symbol No.	Part No.	Part Name	Description		
	C1302	NCB21HK-823X	CHIP CAP.	0.082μF	50V	K
	C1303	QETN1EM-476Z	E CAP.	47μF	25V	M
	C1304	NCB21HK-103X	C CAP.	0.01μF	50V	K
	C1305	QETN1CM-107Z	E CAP.	100μF	16V	M
	C1306	NCB21HK-103X	C CAP.	0.01μF	50V	K
	C1307	QETN1CM-477Z	E CAP.	470μF	16V	M
	C1308	NDC21HJ-120X	C CAP.	12pF	50V	J
	C1309	QETN1HM-475Z	E CAP.	4.7μF	50V	M
	C1310	NCB21HK-103X	C CAP.	0.01μF	50V	K
	C1311	QETN1HM-106Z	E CAP.	10μF	50V	M
	C1312	NDC21HJ-680X	C CAP.	68pF	50V	J
	C1313	QETN1CM-107Z	E CAP.	100μF	16V	M
	C1314	NCB21HK-103X	C CAP.	0.01μF	50V	K
	C1315	QETN1HM-106Z	E CAP.	10μF	50V	M
	C1319	QETN1CM-107Z	E CAP.	100μF	16V	M
	C1320	NCB21HK-103X	C CAP.	0.01μF	50V	K
	C1321-23	NCB21EK-104X	C CAP.	0.1μF	25V	K
	C1324-26	QETN1HM-105Z	E CAP.	1μF	50V	M
	C1327	QETN1HM-475Z	E CAP.	4.7μF	50V	M
	C1328	QETN1CM-107Z	E CAP.	100μF	16V	M
	C1329	QETN1EM-476Z	E CAP.	47μF	25V	M
	C1331	QETN1HM-105Z	E CAP.	1μF	50V	M
	C1332	NCB21HK-103X	C CAP.	0.01μF	50V	K
	C1333	NCB21EK-104X	C CAP.	0.1μF	25V	K
	C1401	QETN1HM-105Z	E CAP.	1μF	50V	M
	C1403-05	NCB21HK-103X	C CAP.	0.01μF	50V	K
	C1406	QFV71HJ-184Z	MF CAP.	0.18μF	50V	J
	C1407	QFV71HJ-824Z	MF CAP.	0.82μF	50V	J
	C1408	NCB21HK-153X	C CAP.	0.015μF	50V	K
	C1501	QETN1CM-107Z	E CAP.	100μF	16V	M
	C1502-04	NCB21HK-103X	C CAP.	0.01μF	50V	K
	C1505	NCB21HK-332X	C CAP.	3300pF	50V	K
	C1506	QETN1HM-335Z	E CAP.	3.3μF	50V	M
	C1507	NCB21HK-103X	C CAP.	0.01μF	50V	K
	C1508	QETN1CM-108Z	E CAP.	1000μF	16V	M
	C1509	NCB21HK-823X	CHIP CAP.	0.082μF	50V	K
	C1510-11	NCB21HK-103X	C CAP.	0.01μF	50V	K
	C1512	QTMN1HM-105Z	E CAP.	0.1μF	50V	M
	C1513	QETM1CM-228	E CAP.	2200μF	16V	M
	C1514	NCB21HK-103X	C CAP.	0.01μF	50V	K
	C1515	QFV71HJ-394Z	MF CAP.	0.39μF	50V	J
	C1516	NCB21HK-103X	C CAP.	0.01μF	50V	K
	C1571	NCB21HK-103X	C CAP.	0.01μF	50V	K
	C1605	QETN1HM-106Z	E CAP.	10μF	50V	M
	C1606	QETN1EM-227Z	E CAP.	220μF	25V	M
	C1622-23	QETN1CM-227Z	E CAP.	220μF	16V	M
	C1624	QETN1EM-476Z	E CAP.	47μF	25V	M
	C1626	QENC1EM-107Z	BP E CAP.	100μF	25V	M
	C1627	QETM1EM-228	E CAP.	2200μF	25V	M
	C1629	QENC1EM-107Z	BP E CAP.	100μF	25V	M
	C1631	QETN1EM-476Z	E CAP.	47μF	25V	M
	C1632	NCS21HJ-221X	C CAP.	220pF	50V	J
	C1633-34	QFV71HJ-104Z	MF CAP.	0.1μF	50V	J
	C1635-36	QETN1EM-108Z	E CAP.	1000μF	25V	M
	C1637-38	QFV71HJ-104Z	MF CAP.	0.1μF	50V	J
	C1639	QETN1HM-106Z	E CAP.	10μF	50V	M
	C1640	NCS21HJ-221X	C CAP.	220pF	50V	J
	C1641	QETN1HM-226Z	E CAP.	22μF	50V	M
	C1668	NCB21EK-104X	C CAP.	0.1μF	25V	K
	C1671	QETN1CM-107Z	E CAP.	100μF	16V	M
	C1672	NCB21EK-104X	C CAP.	0.1μF	25V	K
	C1701	NCF21CZ-105X	C CAP.	1μF	16V	Z
	C1703	QETN1EM-476Z	E CAP.	47μF	25V	M
	C1704	NCB21EK-104X	C CAP.	0.1μF	25V	K
	C1705	QETN1AM-107Z	E CAP.	100μF	10V	M
	C1706	NCB21EK-104X	C CAP.	0.1μF	25V	K
	C1707	QETN1HM-474Z	E CAP.	0.47μF	50V	M
	C1708	QETN1EM-476Z	E CAP.	47μF	25V	M
	C1709-10	NDC21HJ-9R0X	C CAP.	9.0pF	50V	J
	C1711	NCB21EK-104X	C CAP.	0.1μF	25V	K
	C1712	NDC21HJ-151X	C CAP.	150pF	50V	J
	C1716-17	QETN1HM-105Z	E CAP.	1μF	50V	M

CAPACITOR

⚠	Symbol No.	Part No.	Part Name	Description		
	C1718	NCB21HK-333X	C CAP.	0.033μF	50V	K
	C1725	NCB21HK-102X	C CAP.	1000pF	50V	K
	C1871	NCB21EK-104X	C CAP.	0.1μF	25V	K
	C1872	NCB21HK-223X	C CAP.	0.022μF	50V	K
	C1873	NDC21HJ-221X	C CAP.	220pF	50V	J
	C1874-75	NDC21HJ-150X	C CAP.	15pF	50V	J
	C1876	NCB21HK-102X	C CAP.	1000pF	50V	K
	C1877	NCB21EK-104X	C CAP.	0.1μF	25V	K
	C1878	NCB21HK-102X	C CAP.	1000pF	50V	K
	C1879	NDC21HJ-221X	C CAP.	220pF	50V	J
	C1880	QETN1AM-477Z	E CAP.	470μF	10V	M
	C1881	NCB21EK-104X	C CAP.	0.1μF	25V	K
	C1882	QETN1EM-476Z	E CAP.	47μF	25V	M
	C1883	NCB21HK-103X	C CAP.	0.01μF	50V	K
	C1884-85	NCB21EK-104X	C CAP.	0.1μF	25V	K
	C1886	NCB21HK-103X	C CAP.	0.01μF	50V	K
	C1887-89	QETN1HM-106Z	E CAP.	10μF	50V	M
⚠	C1901	QFZ9040-474	MF CAP.	0.47μF	AC275V	M

COIL

L1001	QQL244K-5R6Z	PEAKING COIL	5.6μH
L1002	QQL244K-270Z	PEAKING COIL	27μH
L1301-02	QQL244K-4R7Z	PEAKING COIL	4.7μH
L1305	QQL244K-4R7Z	PEAKING COIL	4.7μH
L1501	QQL244J-151Z	PEAKING COIL	150μH
L1701	QQL244K-4R7Z	PEAKING COIL	4.7μH
L1702	QQL244K-3R9Z	PEAKING COIL	
L1871	QQL244K-4R7Z	PEAKING COIL	4.7μH

DIODE

D1301	MA3051/M/-X	ZENER DIODE
D1302-04	MA111-X	SI.DIODE
D1503	RB100A-T2	SI.DIODE
D1602	MA111-X	SI.DIODE
D1608	MA111-X	SI.DIODE
D1612	MA111-X	SI.DIODE
D1624-25	MA111-X	SI.DIODE
D1701	MA3068/M/-X	ZENER DIODE
D1702	MA111-X	SI.DIODE
D1704	MA111-X	SI.DIODE
D1705	MA3036-X	ZENER DIODE
D1706-08	MA111-X	SI.DIODE
D1710	MA111-X	SI.DIODE

TRANSISTOR

Q1301-02	2SA1037AK/QR/-X	SI.TRANSISTOR
Q1311	DTC124EKA-X	DIGI.TRANSISTOR
Q1312	2SA1037AK/QR/-X	SI.TRANSISTOR
Q1401	DTC124EKA-X	DIGI.TRANSISTOR
Q1402	2SC2412K/QR/-X	SI.TRANSISTOR
Q1604	2SA1037AK/QR/-X	SI.TRANSISTOR
Q1609	2SA1037AK/QR/-X	SI.TRANSISTOR
Q1610	DTC323TK-X	DIGI.TRANSISTOR
Q1612	DTC323TK-X	DIGI.TRANSISTOR
Q1701-04	2SC2412K/QR/-X	SI.TRANSISTOR
Q1705	2SA1037AK/QR/-X	SI.TRANSISTOR
Q1708	2SA1037AK/QR/-X	SI.TRANSISTOR
Q1709-10	2SC2412K/QR/-X	SI.TRANSISTOR
Q1871	2SA1037AK/QR/-X	SI.TRANSISTOR
Q1872	2SC2412K/QR/-X	SI.TRANSISTOR

IC

IC1301	TB1227CN	I C	
IC1302	TC4053BP/N/	I.C.(DIGI-MOS)	
IC1501	AN5441SA-W	I C	
IC1601	LA4446	I.C.(MONO-ANA)	
IC1607	BA05T	I.C.(MONO-ANA)	
IC1701	M37280MK-207SP	I C	
IC1702	AT24C16-24WT5	I.C.	(SERVICE)
IC1703	L78LR05E-MA	I.C.(MONO-ANA)	
IC1871	ET417	I.C.(M)	
IC1872	ET206	I.C.(M)	

⚠	Symbol No.	Part No.	Part Name	Description
	OTHERS			
		CEMG002-001Z	FUSE CLIP	
	CN1001	QGF1220C2-19	FFC/FPC CONNECTO	
⚠	F1901	QMF51D2-3R15J1	FUSE	3.15A
	K1001	QQR0621-002Z	BEADS CORE	
	K1004	QQR0621-002Z	BEADS CORE	
	K1307	QQR0621-002Z	BEADS CORE	
	K1872	QQL244K-3R3Z	PEAKING COIL	
	LC1301	CE42142-222Z	EMI FILTER	
⚠	LF1901	QQR1095-001	LINE FILTER	
⚠	S1901	QSW0824-001	PUSH SWITCH	POWER SW
	TU1001	QAU0189-002	TUNER	
	X1301	QAX0305-001Z	CRYSTAL	
	X1701	CST8.00MTW	CER.RESONATOR	
	X1871	CE41257-001Z	CRYSTAL	

■ POWER & DEF. P.W. BOARD ASS'Y (SJK-2513A-U2)

Refer to PARTS LIST in page 60 for this P.W. board.

■ CRT SOCKET P.W. BOARD ASS'Y (SJK-3513A-U2)

Refer to PARTS LIST in page 62 for this P.W. board.

■ FRONT CONTROL P.W. BOARD ASS'Y (SJK-8513A-U2)

Refer to PARTS LIST in page 62 for this P.W. board.

■ AV SEL. P.W. BOARD ASS'Y (SJK0S913A-U2)

⚠	Symbol No.	Part No.	Part Name	Description
	RESISTOR			
	R0101-08	NRSA02J-750X	MG R	75Ω 1/10W J
	R0110	NRSA02J-823X	MG R	82kΩ 1/10W J
	R0112	NRSA02J-823X	MG R	82kΩ 1/10W J
	R0113	NRSA02J-750X	MG R	75Ω 1/10W J
	R0114	NRSA02J-473X	MG R	47kΩ 1/10W J
	R0115-16	NRSA02J-223X	MG R	22kΩ 1/10W J
	R0117-18	NRSA02J-823X	MG R	82kΩ 1/10W J
	R0119-20	NRSA02J-391X	MG R	390Ω 1/10W J
	R0123	NRSA02J-104X	MG R	100kΩ 1/10W J
	R0124-25	NRSA02J-101X	MG R	100Ω 1/10W J
	R0126	NRSA02J-333X	MG R	33kΩ 1/10W J
	R0127	NRSA02J-101X	MG R	100Ω 1/10W J
	R0128	NRSA02J-103X	MG R	10kΩ 1/10W J
	R0129	NRSA02J-823X	MG R	82kΩ 1/10W J
	R0130	NRSA02J-473X	MG R	47kΩ 1/10W J
	R0131	NRSA02J-273X	MG R	27kΩ 1/10W J
	R0132	NRSA02J-153X	MG R	15kΩ 1/10W J
	R0133	NRSA02J-222X	MG R	2.2kΩ 1/10W J
	R0134	NRSA02J-333X	MG R	33kΩ 1/10W J
	R0135	NRSA02J-222X	MG R	2.2kΩ 1/10W J
	R0136-37	NRSA02J-333X	MG R	33kΩ 1/10W J
	R0138	NRSA02J-473X	MG R	47kΩ 1/10W J
	R0139	NRSA02J-823X	MG R	82kΩ 1/10W J
	R0140	NRSA02J-103X	MG R	10kΩ 1/10W J
	R0141	NRSA02J-153X	MG R	15kΩ 1/10W J
	R0142	NRSA02J-223X	MG R	22kΩ 1/10W J
	R0143	NRSA02J-473X	MG R	47kΩ 1/10W J
	R0144	NRSA02J-273X	MG R	27kΩ 1/10W J
	R0146	NRSA02J-391X	MG R	390Ω 1/10W J
	R0148	NRSA02J-391X	MG R	390Ω 1/10W J
	R0151	NRSA02J-104X	MG R	100kΩ 1/10W J
	R0152	NRSA02J-222X	MG R	2.2kΩ 1/10W J
	R0153	NRSA02J-333X	MG R	33kΩ 1/10W J
	R0154	NRSA02J-222X	MG R	2.2kΩ 1/10W J
	R0155	NRSA02J-333X	MG R	33kΩ 1/10W J
	R0156-69	NRSA02J-101X	MG R	100Ω 1/10W J
	R0170	NRSA02J-333X	MG R	33kΩ 1/10W J
	R0171	NRSA02J-222X	MG R	2.2kΩ 1/10W J
	R0172	NRSA02J-473X	MG R	47kΩ 1/10W J
	R0173	NRSA02J-823X	MG R	82kΩ 1/10W J
	R0174	NRSA02J-103X	MG R	10kΩ 1/10W J
	R0175	NRSA02J-153X	MG R	15kΩ 1/10W J
	R0176	NRSA02J-473X	MG R	47kΩ 1/10W J
	R0177	NRSA02J-273X	MG R	27kΩ 1/10W J
	R0180-83	NRSA02J-101X	MG R	100Ω 1/10W J
	R0184	NRSA02J-333X	MG R	33kΩ 1/10W J
	R0185	NRSA02J-222X	MG R	2.2kΩ 1/10W J
	R0186	NRSA02J-333X	MG R	33kΩ 1/10W J
	R0188	NRSA02J-101X	MG R	100Ω 1/10W J
	R0189-90	NRSA02J-221X	MG R	220Ω 1/10W J
	R0191-92	NRSA02J-562X	MG R	5.6kΩ 1/10W J
	R0193-94	NRSA02J-102X	MG R	1kΩ 1/10W J
	R0195	QRG01GJ-101	OM R	100Ω 1W J
	R0197	QRK126J-181X	C R	180Ω 1/2W J
	R0198	NRSA02J-750X	MG R	75Ω 1/10W J
	R0199	NRSA02J-101X	MG R	100Ω 1/10W J
	R0202	QRK126J-151X	C R	150Ω 1/2W J
	R0203-05	NRSA02J-750X	MG R	75Ω 1/10W J
	R0207	NRSA02J-222X	MG R	2.2kΩ 1/10W J
	R0208	NRSA02J-333X	MG R	33kΩ 1/10W J
	R0209	NRSA02J-222X	MG R	2.2kΩ 1/10W J
	R0210	NRSA02J-333X	MG R	33kΩ 1/10W J
	R0211-12	NRSA02J-103X	MG R	10kΩ 1/10W J
	R0603	NRSA02J-102X	MG R	1kΩ 1/10W J
	R0606	QRG01GJ-181	OM R	180Ω 1W J
	R0607	NRSA02J-123X	MG R	12kΩ 1/10W J
	R0608	NRSA02J-181X	MG R	180Ω 1/10W J
	R0609	NRSA02J-123X	MG R	12kΩ 1/10W J
	R0610	NRSA02J-122X	MG R	1.2kΩ 1/10W J
	R0614	NRSA02J-103X	MG R	10kΩ 1/10W J
	R0615	NRSA02J-101X	MG R	100Ω 1/10W J
	R0617	NRSA02J-102X	MG R	1kΩ 1/10W J

RESISTOR

⚠ Symbol No.	Part No.	Part Name	Description
R0618	NRSA02J-332X	MG R	3.3kΩ 1/10W J
R0620	NRSA02J-333X	MG R	33kΩ 1/10W J
R0622	NRSA02J-103X	MG R	10kΩ 1/10W J
R0623	NRSA02J-102X	MG R	1kΩ 1/10W J
R0628	NRSA02J-0R0X	MG R	0.0Ω 1/10W J
R0629-31	NRSA02J-101X	MG R	100Ω 1/10W J
R0632	NRSA02J-332X	MG R	3.3kΩ 1/10W J
R0633	NRSA02J-221X	MG R	220Ω 1/10W J
R0634-35	NRSA02J-332X	MG R	3.3kΩ 1/10W J
R0647-48	NRSA02J-101X	MG R	100Ω 1/10W J
R0651	NRSA02J-122X	MG R	1.2kΩ 1/10W J

CAPACITOR

⚠ Symbol No.	Part No.	Part Name	Description
C0101	NDC21HJ-151X	C CAP.	150pF 50V J
C0102	QETN1CM-477Z	E CAP.	470μF 16V M
C0103-05	QETN1HM-106Z	E CAP.	10μF 50V M
C0106	NCB21HK-472X	C CAP.	4700pF 50V K
C0107	NCB21HK-152X	C CAP.	1500pF 50V K
C0108	NCB21HK-472X	C CAP.	4700pF 50V K
C0109	NCB21HK-152X	C CAP.	1500pF 50V K
C0110	QETN1CM-477Z	E CAP.	470μF 16V M
C0111-12	NCB21HK-472X	C CAP.	4700pF 50V K
C0113	NDC21HJ-151X	C CAP.	150pF 50V J
C0114-15	NCB21HK-472X	C CAP.	4700pF 50V K
C0116-17	QETN1HM-106Z	E CAP.	10μF 50V M
C0118	NCB21HK-102X	C CAP.	1000pF 50V K
C0119	QETN1HM-105Z	E CAP.	1μF 50V M
C0120	QETN1HM-106Z	E CAP.	10μF 50V M
C0121	QETN1HM-105Z	E CAP.	1μF 50V M
C0122	NCB21HK-103X	C CAP.	0.01μF 50V K
C0123	NCB21HK-102X	C CAP.	1000pF 50V K
C0124-25	QETN1HM-106Z	E CAP.	10μF 50V M
C0126	QETN1HM-105Z	E CAP.	1μF 50V M
C0127	QETN1HM-106Z	E CAP.	10μF 50V M
C0128	QETN1HM-105Z	E CAP.	1μF 50V M
C0129	QETN1HM-106Z	E CAP.	10μF 50V M
C0130	QETN1HM-105Z	E CAP.	1μF 50V M
C0131	NCB21HK-102X	C CAP.	1000pF 50V K
C0132	QETN1HM-105Z	E CAP.	1μF 50V M
C0133	NCB21HK-103X	C CAP.	0.01μF 50V K
C0136	QETN1HM-106Z	E CAP.	10μF 50V M
C0137	QENC1EM-106Z	BP E CAP.	10μF 25V M
C0139	QENC1EM-106Z	BP E CAP.	10μF 25V M
C0140	QETN1CM-107Z	E CAP.	100μF 16V M
C0141	NCB21HK-103X	C CAP.	0.01μF 50V K
C0142	QENC1HM-105Z	BP E CAP.	1μF 50V M
C0143	QENC1EM-106Z	BP E CAP.	10μF 25V M
C0144	QENC1HM-105Z	BP E CAP.	1μF 50V M
C0145-46	QETN1CM-107Z	E CAP.	100μF 16V M
C0147	QETN1CM-477Z	E CAP.	470μF 16V M
C0149	NCB21HK-103X	C CAP.	0.01μF 50V K
C0150-51	QETN1HM-106Z	E CAP.	10μF 50V M
C0152-53	QETN1HM-105Z	E CAP.	1μF 50V M
C0154-55	NDC21HJ-680X	C CAP.	68pF 50V J
C0157-58	NDC21HJ-680X	C CAP.	68pF 50V J
C0159	NDC21HJ-561X	C CAP.	560pF 50V J
C0160	NDC21HJ-102X	C CAP.	1000pF 50V J
C0161	NDC21HJ-680X	C CAP.	68pF 50V J
C0610	NDC21HJ-821X	C CAP.	820pF 50V J
C0611-12	NDC21HJ-470X	C CAP.	47pF 50V J
C0614	NDC21HJ-180X	C CAP.	18pF 50V J
C0616	QETN1CM-107Z	E CAP.	100μF 16V M
C0617	NCB21EK-104X	C CAP.	0.1μF 25V K
C0618	QETN1HM-106Z	E CAP.	10μF 50V M
C0619	NCB21EK-104X	C CAP.	0.1μF 25V K
C0620	QETN1HM-106Z	E CAP.	10μF 50V M
C0621-22	QENC1HM-105Z	BP E CAP.	1μF 50V M
C0623	NCB21EK-104X	C CAP.	0.1μF 25V K
C0624	QETN1HM-106Z	E CAP.	10μF 50V M
C0625	QETN1CM-227Z	E CAP.	220μF 16V M
C0626	NCB21HK-153X	C CAP.	0.015μF 50V K
C0627	QENC1HM-105Z	BP E CAP.	1μF 50V M
C0628	NCB21HK-223X	C CAP.	0.022μF 50V K

CAPACITOR

⚠ Symbol No.	Part No.	Part Name	Description
C0629	QETN1HM-106Z	E CAP.	10μF 50V M
C0630-31	NCB21HK-102X	C CAP.	1000pF 50V K
C0632	NCB21EK-104X	C CAP.	0.1μF 25V K
C0633	QETN1HM-106Z	E CAP.	10μF 50V M
C0634-35	NCB21HK-103X	C CAP.	0.01μF 50V K
C0636	NDC21HJ-2R0X	C CAP.	2.0pF 50V J
C0637	NCB21HK-222X	C CAP.	2200pF 50V K
C0638	QETN1CM-336Z	E CAP.	33μF 16V M
C0639	NCB21HK-153X	C CAP.	0.015μF 50V K
C0640	NCB21HK-223X	C CAP.	0.022μF 50V K
C0641	NCB21HK-222X	C CAP.	2200pF 50V K
C0642	NDC21HJ-2R0X	C CAP.	2.0pF 50V J
C0643	QENC1HM-105Z	BP E CAP.	1μF 50V M
C0645	NCB21HK-103X	C CAP.	0.01μF 50V K
C0646	NCB21EK-104X	C CAP.	0.1μF 25V K
C0647	QETN1CM-107Z	E CAP.	100μF 16V M
C0648	NCB21EK-104X	C CAP.	0.1μF 25V K
C0659-60	QENC1HM-105Z	BP E CAP.	1μF 50V M
C0677-78	NCB21HK-102X	C CAP.	1000pF 50V K

COIL

⚠ Symbol No.	Part No.	Part Name	Description
L0114	QQR0716-001Z	LEAD CORE	
L0601	QQL244K-220Z	PEAKING COIL	22μH
L0602	QQL244K-180Z	PEAKING COIL	18μH
L0604	QQL244K-100Z	PEAKING COIL	10μH
L0605	QQL244K-4R7Z	PEAKING COIL	4.7μH

DIODE

⚠ Symbol No.	Part No.	Part Name	Description
D0101-13	MA3120/M/-X	ZENER DIODE	
D0601	RD8.2E/B2/-T2	ZENER DIODE	

TRANSISTOR

⚠ Symbol No.	Part No.	Part Name	Description
Q0101	DTC323TK-X	DIGI.TRANSISTOR	
Q0102	2SA1037AK/QR/-X	SI.TRANSISTOR	
Q0103	DTC323TK-X	DIGI.TRANSISTOR	
Q0104-07	2SC2412K/QR/-X	SI.TRANSISTOR	
Q0108	2SA1037AK/QR/-X	SI.TRANSISTOR	
Q0109-10	DTC323TK-X	DIGI.TRANSISTOR	
Q0111-12	2SC2412K/QR/-X	SI.TRANSISTOR	
Q0116	2SA933AS/QR/-T	SI.TRANSISTOR	
Q0118	2SC1740S/QR/-T	SI.TRANSISTOR	
Q0119-20	2SC2412K/QR/-X	SI.TRANSISTOR	
Q0601	2SC2412K/QR/-X	SI.TRANSISTOR	

IC

⚠ Symbol No.	Part No.	Part Name	Description
IC0101	CXA2089Q-X	I C	
IC0602	BA4558F-X	I.C.(MONO-ANA)	
IC0603	MSP3415DQGB3GHX	IC	

OTHERS

⚠ Symbol No.	Part No.	Part Name	Description
J0001	QNZ0465-001	PIN CONNECTOR	
J0002	QNZ0463-001	PIN CONNECTOR	
K0101-04	CE42681-001Y	BEADS CORE	
K0601	QQR0621-002Z	BEADS CORE	
LC0601-02	CE42482-103Y	EMI FILTER	
X0601	CE42546-001Z	CRYSTAL	

AV24WT5EPS / AV24WT5EIS / AV24WT5EKS

PACKING

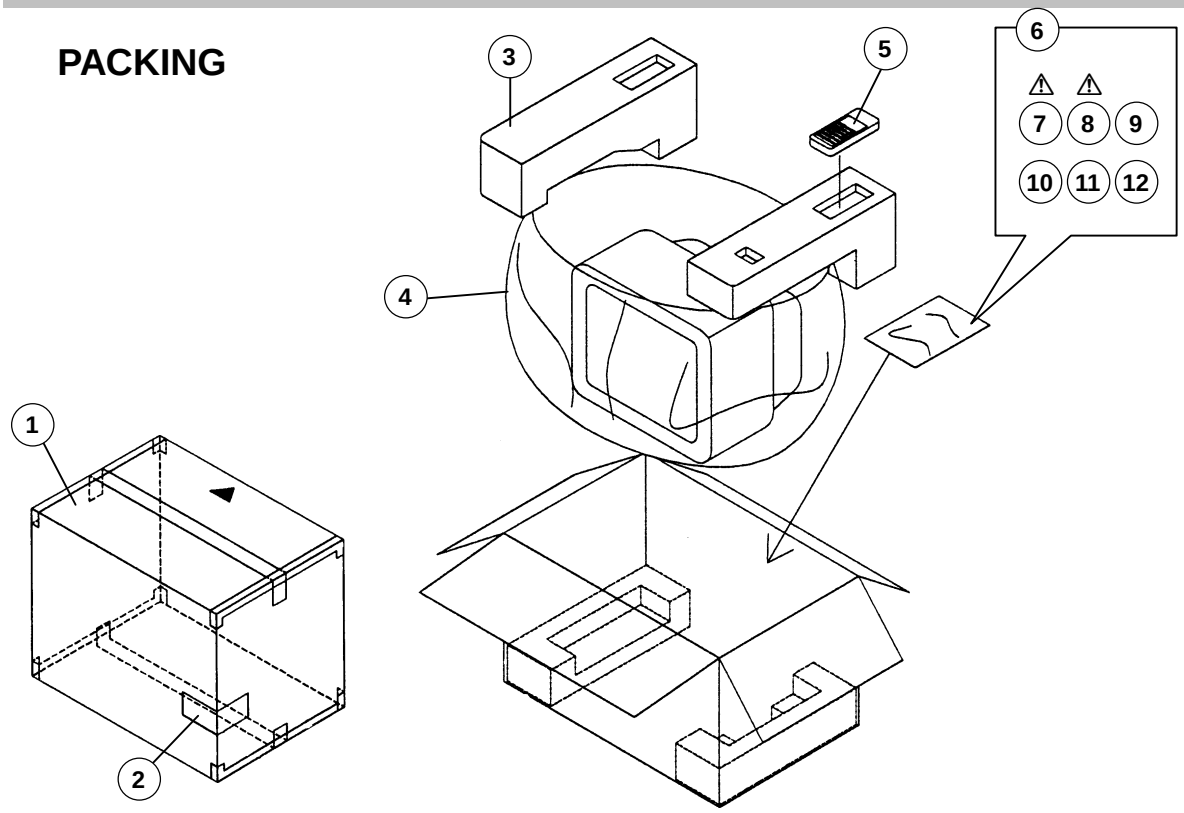

PACKING PARTS LIST

⚠	Ref.No.	Part No.	Part Name	Description
	AV24WT5EPS			
	1	AEM1002-C50-E	EURO BOX	
	2	AEM1052-027-E	EURO LABEL	
	3	CP11618-00B-E	CUSHION ASSY	4pcs in 1set
	4	AEM1047-004-E	POLY BAG	
	5	RM-C54-1C	REMOCON UNIT	
	6	AEM3021-002-E	POLY BAG	
⚠	7	LCT0897-001A-U	INST BOOK	
⚠	8	LCT0898-001A-U	INST BOOK	
	9	BT-54013-1E	WARRANTY CARD	
	10	AEM1060-001-E	X-RAY CARD	
	11	2824WT5-HSAEI	S.DIAGRAM	(SERVICE)
	AV24WT5EIS			
	1	AEM1002-C50-E	EURO BOX	
	2	AEM1052-025-E	EURO LABEL	
	3	CP11618-00B-E	CUSHION ASSY	4pcs in 1set
	4	AEM1047-004-E	POLY BAG	
	5	RM-C55-1C	REMOCON UNIT	
	6	AEM3021-002-E	POLY BAG	
⚠	7	LCT0900-001A-U	INST BOOK	
	9	BT-54013-1E	WARRANTY CARD	
	AV24WT5EKS			
	1	AEM1002-C50-E	EURO BOX	
	2	AEM1052-026-E	EURO LABEL	
	3	CP11618-00B-E	CUSHION ASSY	4pcs in 1set
	4	AEM1047-004-E	POLY BAG	
	5	RM-C55-1C	REMOCON UNIT	
	6	AEM3021-002-E	POLY BAG	
⚠	7	LCT0899-001A-U	INST BOOK	
	9	BT-54013-1E	WARRANTY CARD	
	12	AEM3148-001-E	REG SHEET	

CONTENTS

SEMICONDUCTOR SHAPES 2-2

BLOCK DIAGRAM 2-3

CIRCUIT DIAGRAMS

MAIN PWB CIRCUIT DIAGRAM 2-5
POWER & DEF PWB CIRCUIT DIAGRAM 2-9
AV SEL. PWB CIRCUIT DIAGRAM 2-11
FRONT CONTROL PWB CIRCUIT DIAGRAM [AV28WT5EPS / EIS / EKS] 2-13
FRONT CONTROL PWB CIRCUIT DIAGRAM [AV24WT5EPS / EIS / EKS] 2-13
CRT SOCKET PWB CIRCUIT DIAGRAM 2-15

PATTERN DIAGRAMS

MAIN PWB PATTERN 2-17
POWER & DEF PWB PATTERN 2-19
AV SEL. PWB PATTERN 2-21
CRT SOCKET PWB PATTERN 2-23
FRONT CONTROL PWB PATTERN [AV28WT5EPS / EIS / EKS] 2-25
FRONT CONTROL PWB PATTERN [AV24WT5EPS / EIS / EKS] 2-25

SEMICONDUCTOR SHAPES

TRANSISTOR

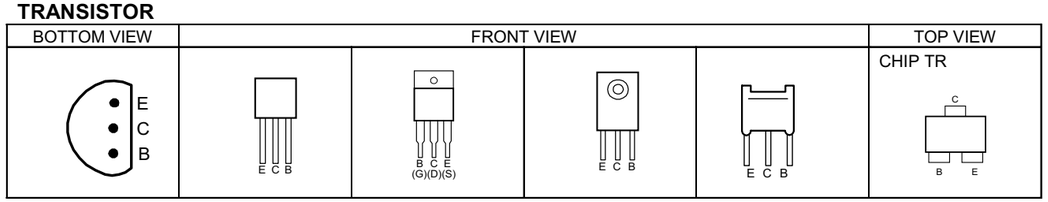

IC

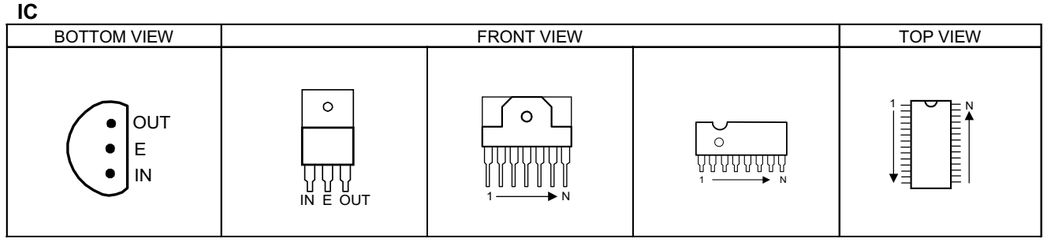

CHIP IC

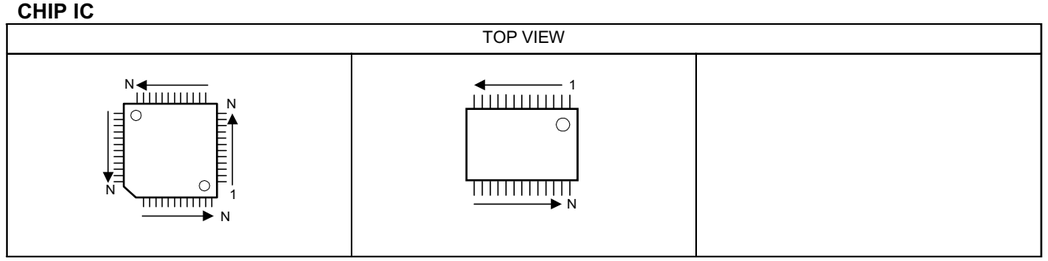

AV28WT5EPS AV24WT5EPS
AV28WT5EIS AV24WT5EIS
AV28WT5EKS AV24WT5EKS

AV28WT5EPS / EIS / EKS
AV24WT5EPS / EIS / EKS
STANDARD CIRCUIT DIAGRAM

■ NOTE ON USING CIRCUIT DIAGRAMS

1. SAFETY

The components identified by the⚠ symbol and shading are critical for safety. For continued safety replace safety critical components only with manufactures recommended parts.

2.SPECIFIED VOLTAGE AND WAVEFORM VALUES

The voltage and waveform values have been measured under the following conditions.

(1)Input signal	:PAL Colour bar signal
(2)Setting positions of each knob/button and variable resistor	:Original setting position when shipped
(3)Internal resistance of tester	:DC 20kΩ/V
(4)Oscilloscope sweeping time	:H ⇒ 20μS/div
	:V ⇒ 5mS/div
	:Others ⇒ Sweeping time is specified
(5)Voltage values	:All DC voltage values

∗ Since the voltage values of signal circuit vary to some extent according to adjustments, use them as reference values.

3.INDICATION OF PARTS SYMBOL [EXAMPLE]

●In the PW board :R1209→R209

4.INDICATIONS ON THE CIRCUIT DIAGRAM

(1)Resistors

●Resistance value

No unit	:[Ω]
K	:[KΩ]
M	:[MΩ]

●Rated allowable power

No indication	:1/10[W]
Others	:As specified

●Type

No indication	:Carbon resistor
OMR	:Oxide metal film resistor
MFR	:Metal film resistor
MPR	:Metal plate resistor
UNFR	:Uninflammable resistor
FR	:Fusible resistor

*Composition resistor 1/2 [W] is specified as 1/2S or Comp.

(2)Capacitors

●Capacitance value

1 or higher	:[pF]
less than 1	:[μF]

●Withstand voltage

No indication	:DC50[V]
AC indicated	:AC withstand voltage [V]
Others	:DC withstand voltage [V]

*Electrolytic Capacitors
47/50[Example]:Capacitance value [μF]/withstand voltage[V]

●Type

No indication	:Ceramic capacitor
MY	:Mylar capacitor
MM	:Metalized mylar capacitor
PP	:Polypropylene capacitor
MPP	:Metalized polypropylene capacitor
MF	:Metalized film capacitor
TF	:Thin film capacitor
BP	:Bipolar electrolytic capacitor
TAN	:Tantalum capacitor

(3)Coils

No unit	:[μH]
Others	:As specified

(4)Power Supply

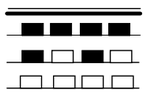

*Respective voltage values are indicated

(5)Test point

(6)Connecting method

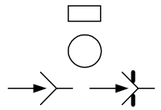

(7)Ground symbol

⊥	:LIVE side ground
⏚	:ISOLATED(NEUTRAL) side ground
⏚	:EARTH ground
⏚	:DIGITAL ground

5.NOTE FOR REPAIRING SERVICE

This model's power circuit is partly different in the GND. The difference of the GND is shown by the LIVE : (⊥) side GND and the ISOLATED(NEUTRAL) : (⏚) side GND. Therefore, care must be taken for the following points.

(1)Do not touch the LIVE side GND or the LIVE side GND and the ISOLATED(NEUTRAL) side GND simultaneously. If the above caution is not respected, an electric shock may be caused. Therefore, make sure that the power cord is surely removed from the receptacle when, for example, the chassis is pulled out.

(2)Do not short between the LIVE side GND and ISOLATED(NEUTRAL) side GND or never measure with a measuring apparatus (oscilloscope, etc.) the LIVE side GND and ISOLATED(NEUTRAL) side GND at the same time. If the above precaution is not respected , a fuse or any parts will be broken.

◇**Since the circuit diagram is a standard one, the circuit and circuit constants may be subject to change for improvement without any notice.**

AV28WT5EPS AV24WT5EPS
AV28WT5EIS AV24WT5EIS
AV28WT5EKS AV24WT5EKS

BLOCK DIAGRAM

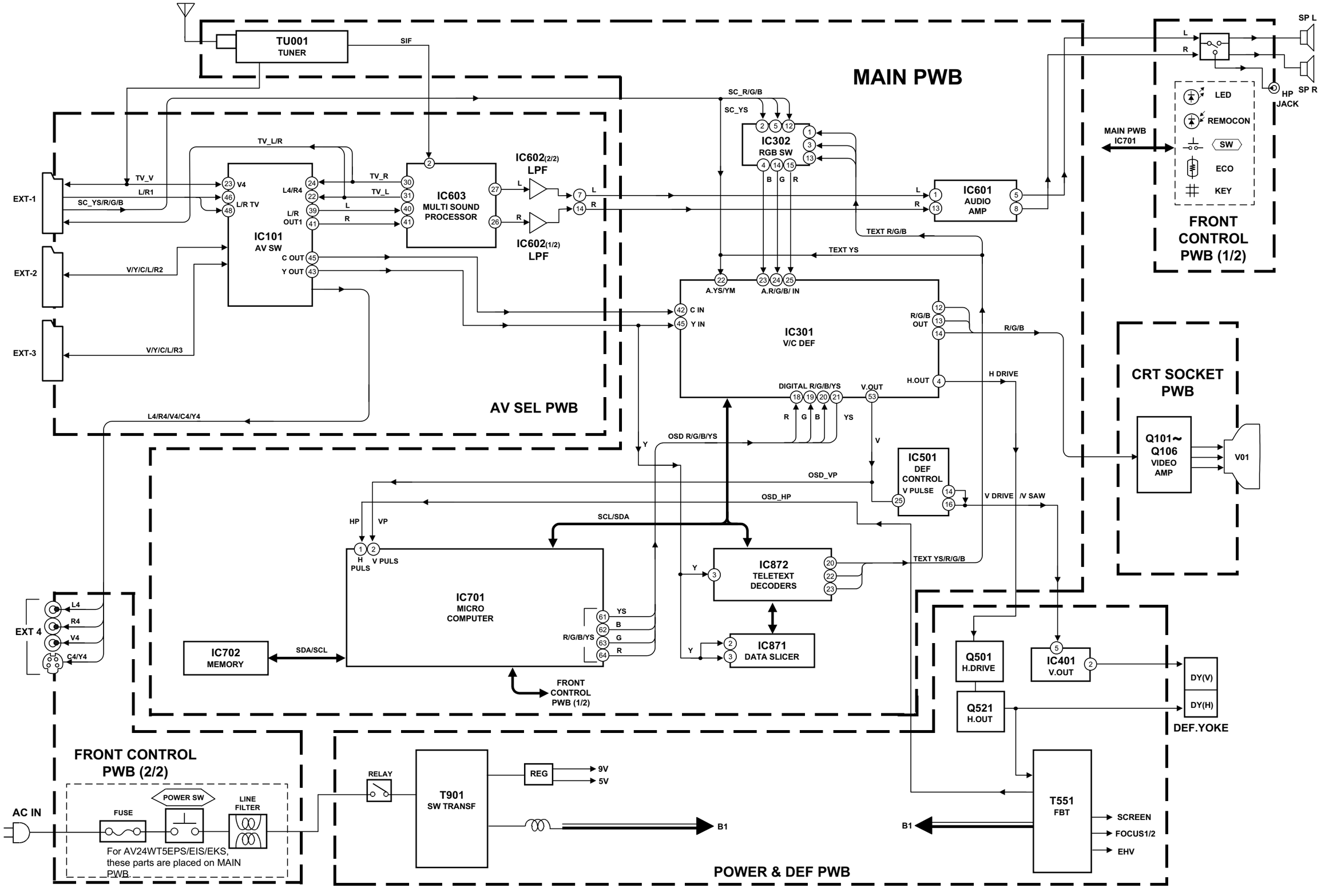

AV28WT5EPS AV24WT5EPS
AV28WT5EIS AV24WT5EIS
AV28WT5EKS AV24WT5EKS

CIRCUIT DIAGRAMS

MAIN PWB CIRCUIT DIAGRAM

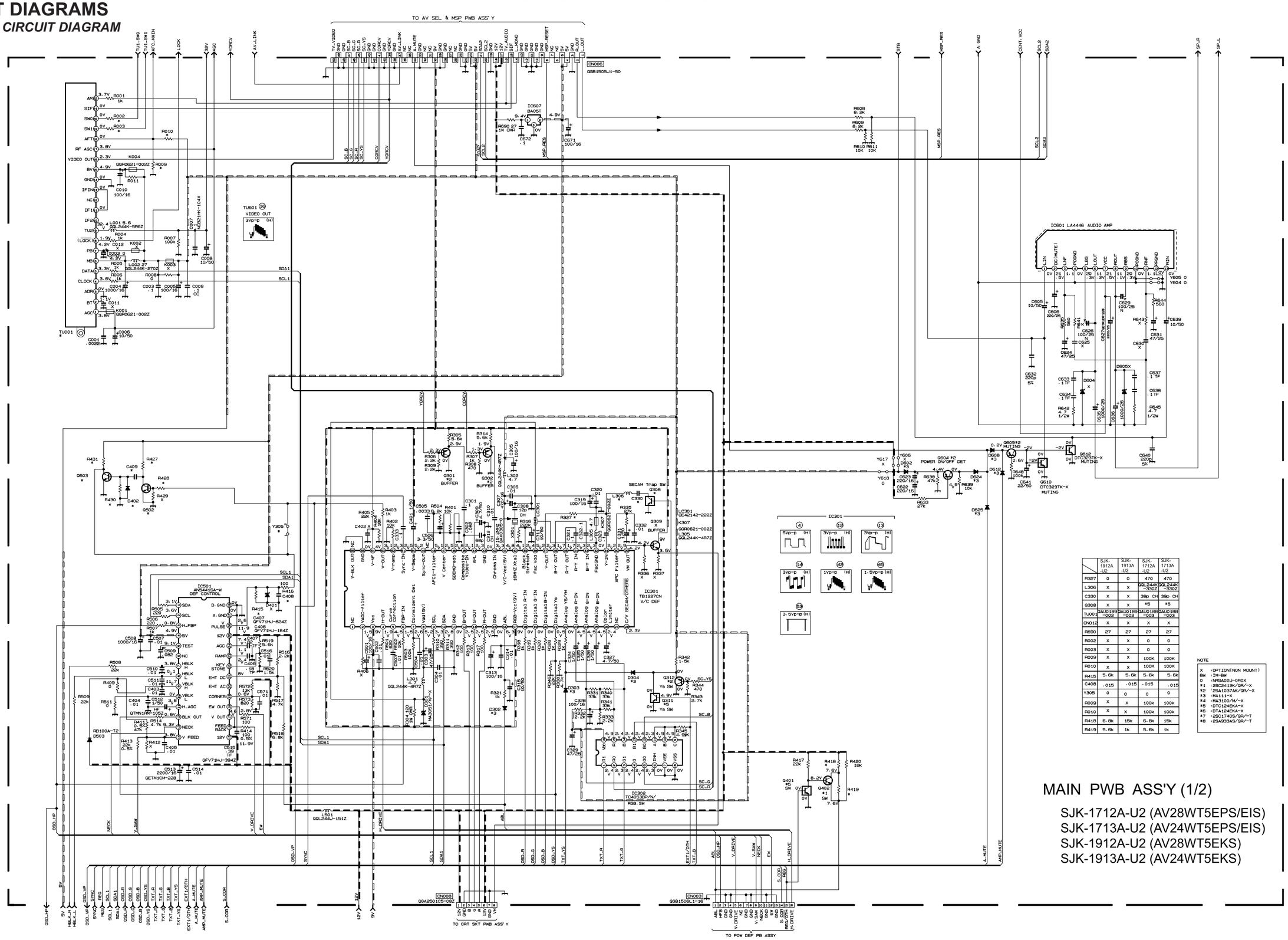

	SJK-1912A-U2	SJK-1913A-U2	SJK-1712A-U2	SJK-1713A-U2
R327	0	0	470	470
L306	X	X	GQL244K-330Z	GQL244K-330Z
C330	X	X	39p CH	39p CH
C308	X	X	*5	*5
TU001	3AU0189-002	3AU0189-002	3AU0188-003	3AU0188-003
CN012	X	X	X	X
R690	27	27	27	27
R002	X	X	0	0
R003	X	X	0	0
R009	X	X	100K	100K
R010	X	X	100K	100K
R415	5.6k	5.6k	5.6k	5.6k
C408	.015	.015	.015	.015
Y305	0	0	0	0
R009	X	X	100k	100k
R010	X	X	100k	100k
R416	6.8k	15k	6.8k	15k
R419	5.6k	1k	5.6k	1k

NOTE

X	:OPTION(NON MOUNT)
BW	:1W-BW
0	:RN5402J-0R0X
*1	:2SC2412K/GR/-X
*2	:2SA1037AK/GR/-X
*3	:MA111-X
*4	:MA3100/M/-X
*5	:DTC124EKA-X
*6	:DTA124EKA-X
*7	:2SC1740S/GR/-T
*8	:2SA933AS/GR/-T

MAIN PWB ASS'Y (1/2)

SJK-1712A-U2 (AV28WT5EPS/EIS)
SJK-1713A-U2 (AV24WT5EPS/EIS)
SJK-1912A-U2 (AV28WT5EKS)
SJK-1913A-U2 (AV24WT5EKS)

AV28WT5EPS AV24WT5EPS
AV28WT5EIS AV24WT5EIS
AV28WT5EKS AV24WT5EKS

Only
AV24WT5EPS/EIS/EKS

	SJK-1912A-U2	SJK-1913A-U2	SJK-1712A-U2	SJK-1713A-U2
C879	220p	220p	18p	18p
R743	X	X	100	100
R744	X	X	100	100
LF901	X	JQR1095-001	X	JQR1095-001
Y901	X	X	X	X
Y902	X	X	X	X
Y903	X	X	X	X
Y904	X	X	X	X
C901	X	QFZ9040-474	X	QFZ9040-474
VA901	X	X	X	X
F901	X	2MF5102-3R15J1	X	2MF5102-3R15J1
S901	X	QSB0824-001	X	QSB0824-001
CN0PW	X	JGA8801-01-02	X	JGA8801-01-02
CN0OW	X	CHG4000-1-AB-G	X	CHG4000-1-AB-G
IC702	AT24C16-28WT5	AT24C16-28WT5	AT24C16-28WT5	AT24C16-28WT5

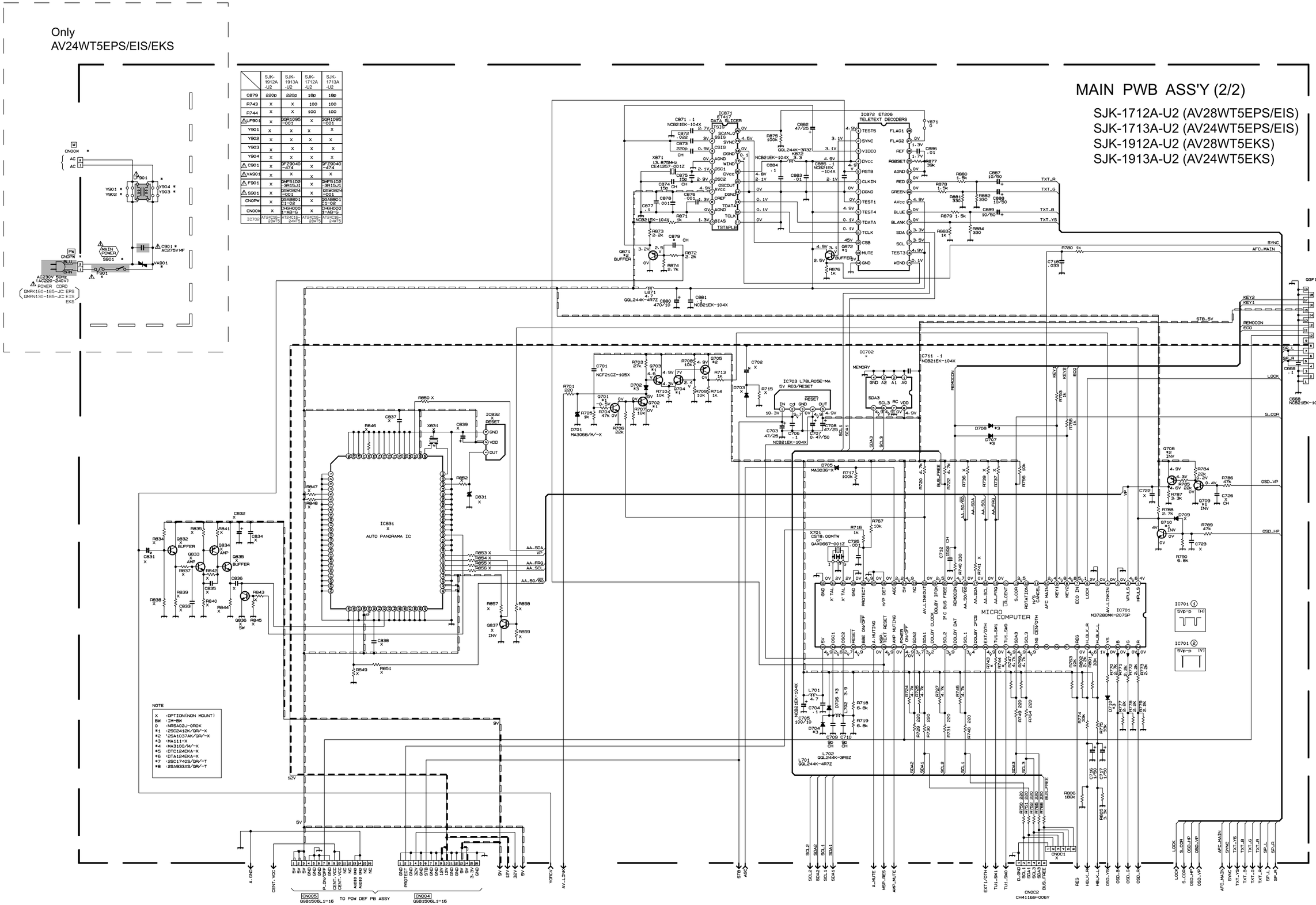

AV28WT5EPS AV24WT5EPS
AV28WT5EIS AV24WT5EIS
AV28WT5EKS AV24WT5EKS

POWER & DEF PWB CIRCUIT DIAGRAM

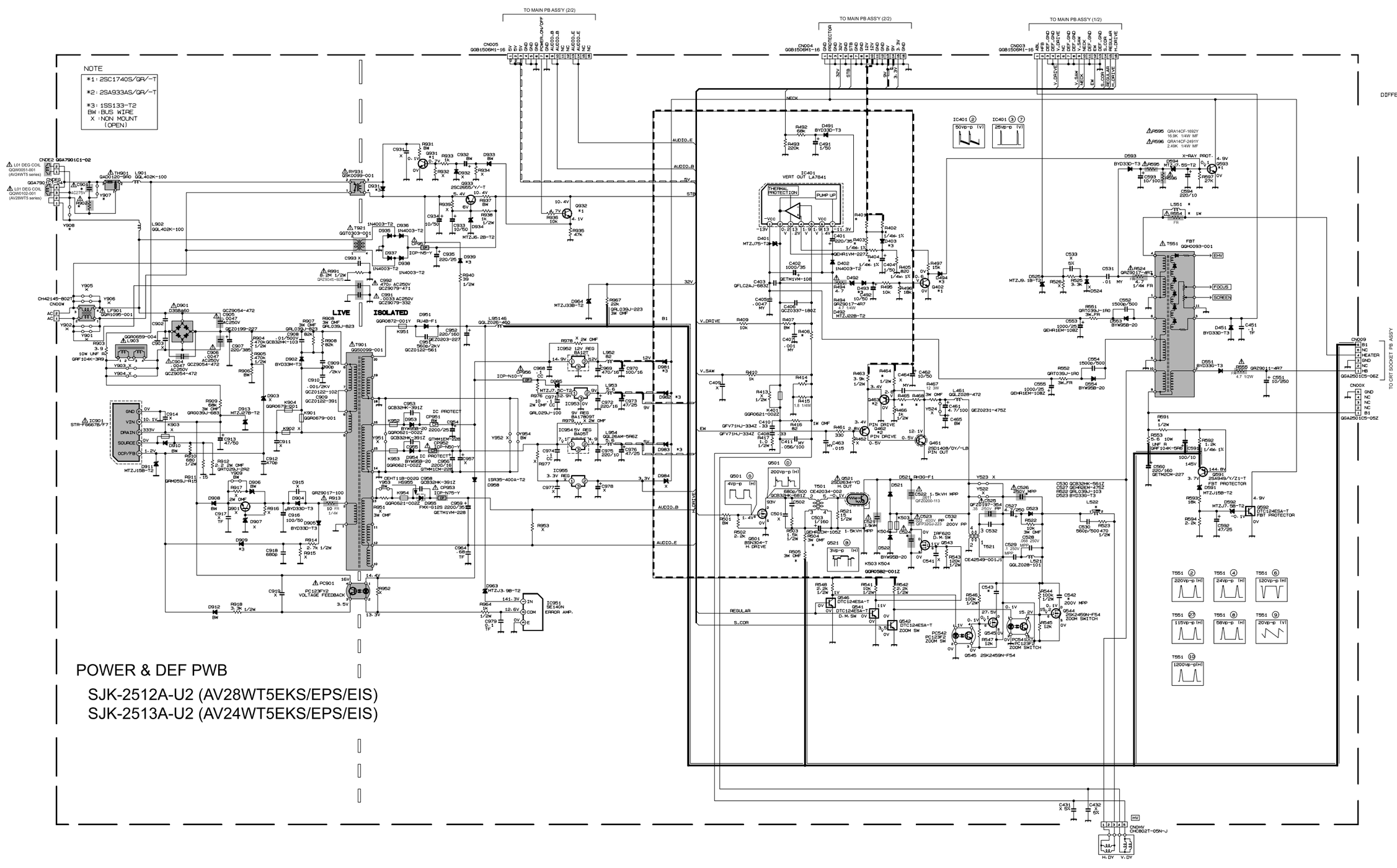

AV28WT5EPS AV24WT5EPS
AV28WT5EIS AV24WT5EIS
AV28WT5EKS AV24WT5EKS

AV SEL. PWB CIRCUIT DIARAM

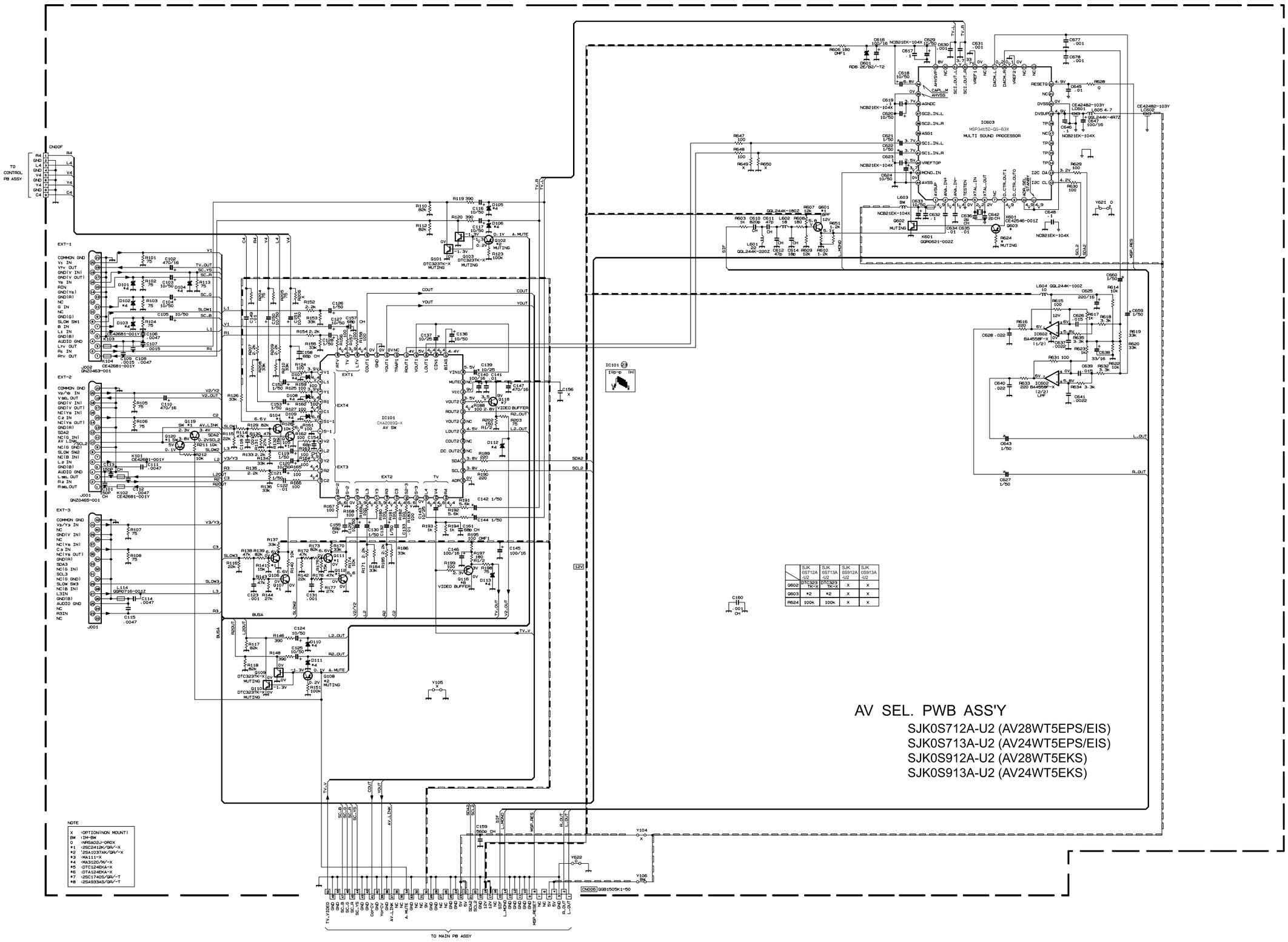

	SJK 0S712A -U2	SJK 0S713A -U2	SJK 0S912A -U2	SJK 0S913A -U2
Q602	DTC323 TK-X	DTC323 TK-X	X	X
Q603	*2	*2	X	X
R624	100K	100K	X	X

AV SEL. PWB ASS'Y

SJK0S712A-U2 (AV28WT5EPS/EIS)
SJK0S713A-U2 (AV24WT5EPS/EIS)
SJK0S912A-U2 (AV28WT5EKS)
SJK0S913A-U2 (AV24WT5EKS)

NOTE

X	:OPTION(NON MOUNT)
SW	:IN-SW
Q	:NRSA02J-OROX
*1	:2SC2412K/GR/-X
*2	:2SA1037AK/GR/-X
*3	:MA111-X
*4	:MA3120/M/-X
*5	:DTC124EKA-X
*6	:DTA124EKA-X
*7	:2SC1740S/GR/-T
*8	:2SA933AS/GR/-T

AV28WT5EPS AV24WT5EPS
AV28WT5EIS AV24WT5EIS
AV28WT5EKS AV24WT5EKS

FRONT CONTROL PWB CIRCUIT DIAGRAM [AV28WT5EPS / EIS / EKS]

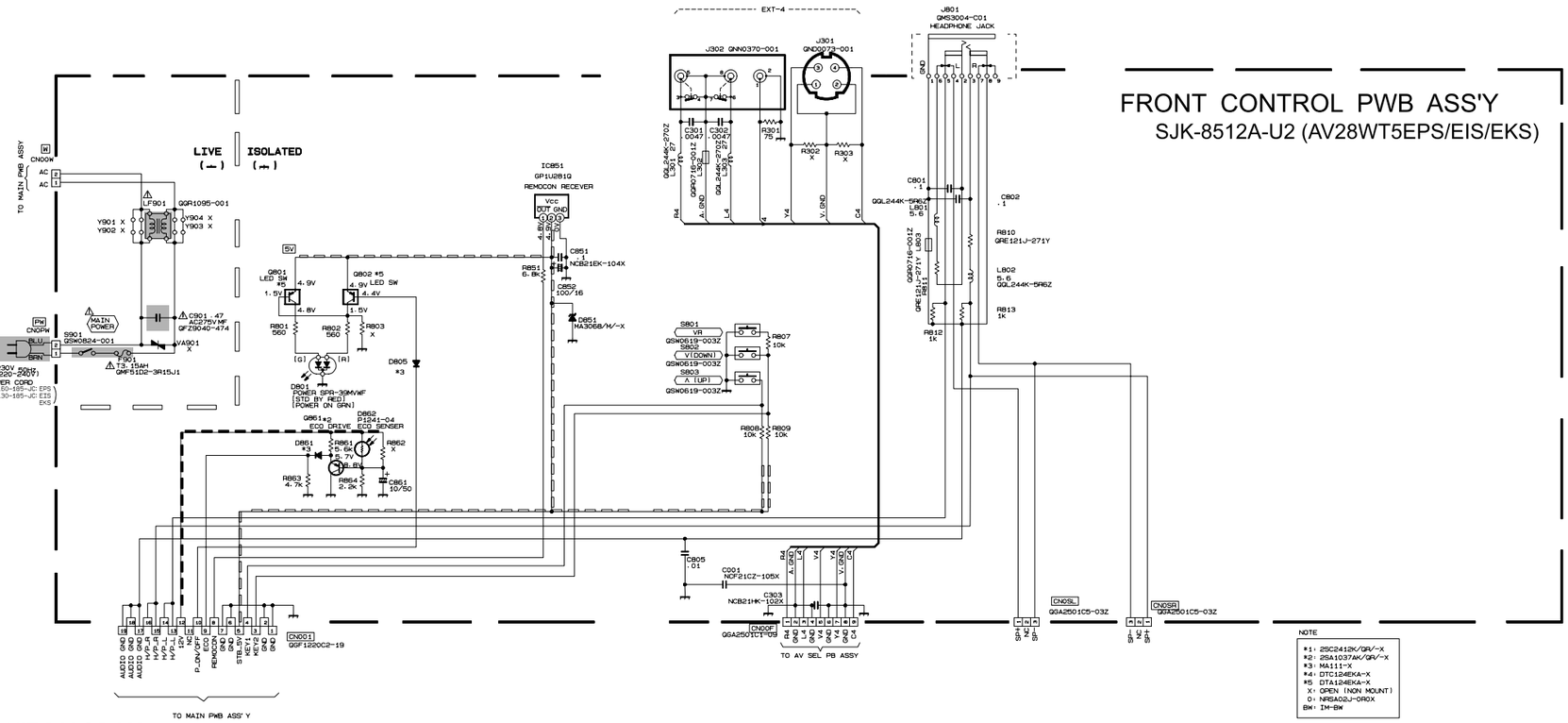

FRONT CONTROL PWB CIRCUIT DIAGRAM [AV24WT5EPS / EIS / EKS]

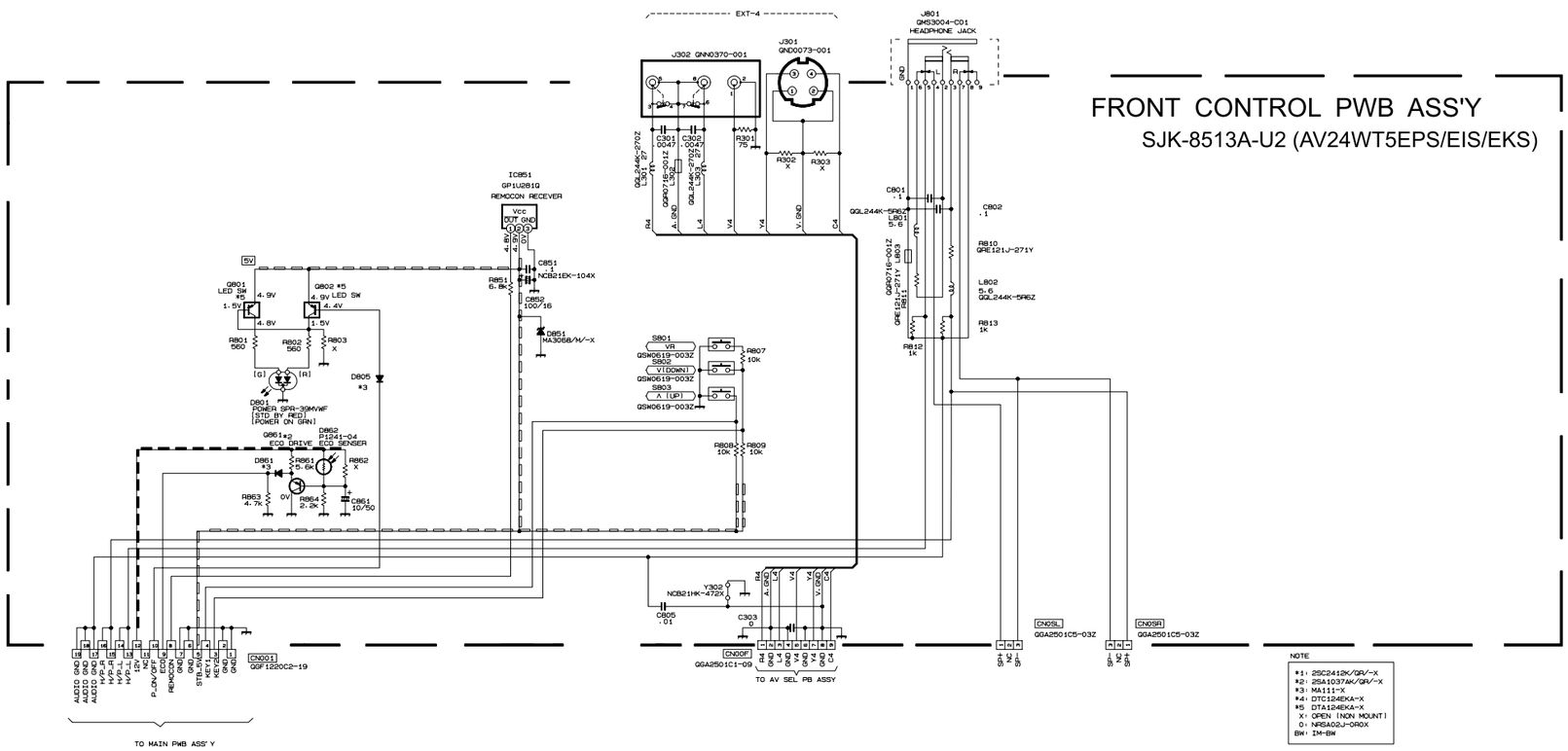

AV28WT5EPS AV24WT5EPS
AV28WT5EIS AV24WT5EIS
AV28WT5EKS AV24WT5EKS

CRT SOCKET PWB CIRCUIT DIAGRAM

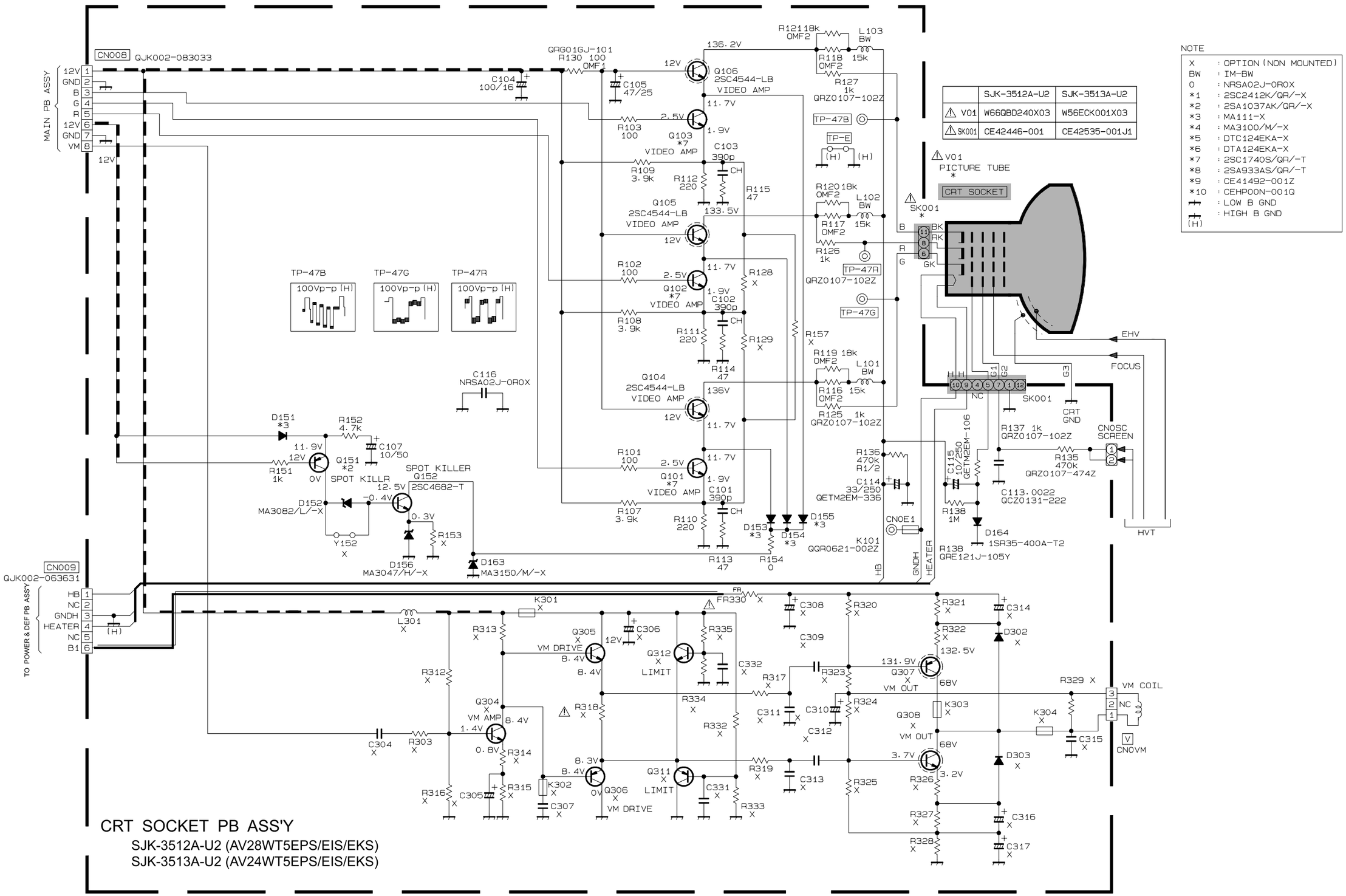

	SJK-3512A-U2	SJK-3513A-U2
⚠ V01	W66QBD240X03	W56ECK001X03
⚠ SK001	CE42446-001	CE42535-001J1

NOTE

X	: OPTION (NON MOUNTED)
BW	: IM-BW
0	: NRSA02J-0R0X
*1	: 2SC2412K/QR/-X
*2	: 2SA1037AK/QR/-X
*3	: MA111-X
*4	: MA3100/M/-X
*5	: DTC124EKA-X
*6	: DTA124EKA-X
*7	: 2SC1740S/QR/-T
*8	: 2SA933AS/QR/-T
*9	: CE41492-001Z
*10	: CEHP00N-001Q
⊥	: LOW B GND
⊥ (H)	: HIGH B GND

AV28WT5EPS AV24WT5EPS
AV28WT5EIS AV24WT5EIS
AV28WT5EKS AV24WT5EKS

PATTERN DIAGRAMS

MAIN PWB PATTERN

FRONT

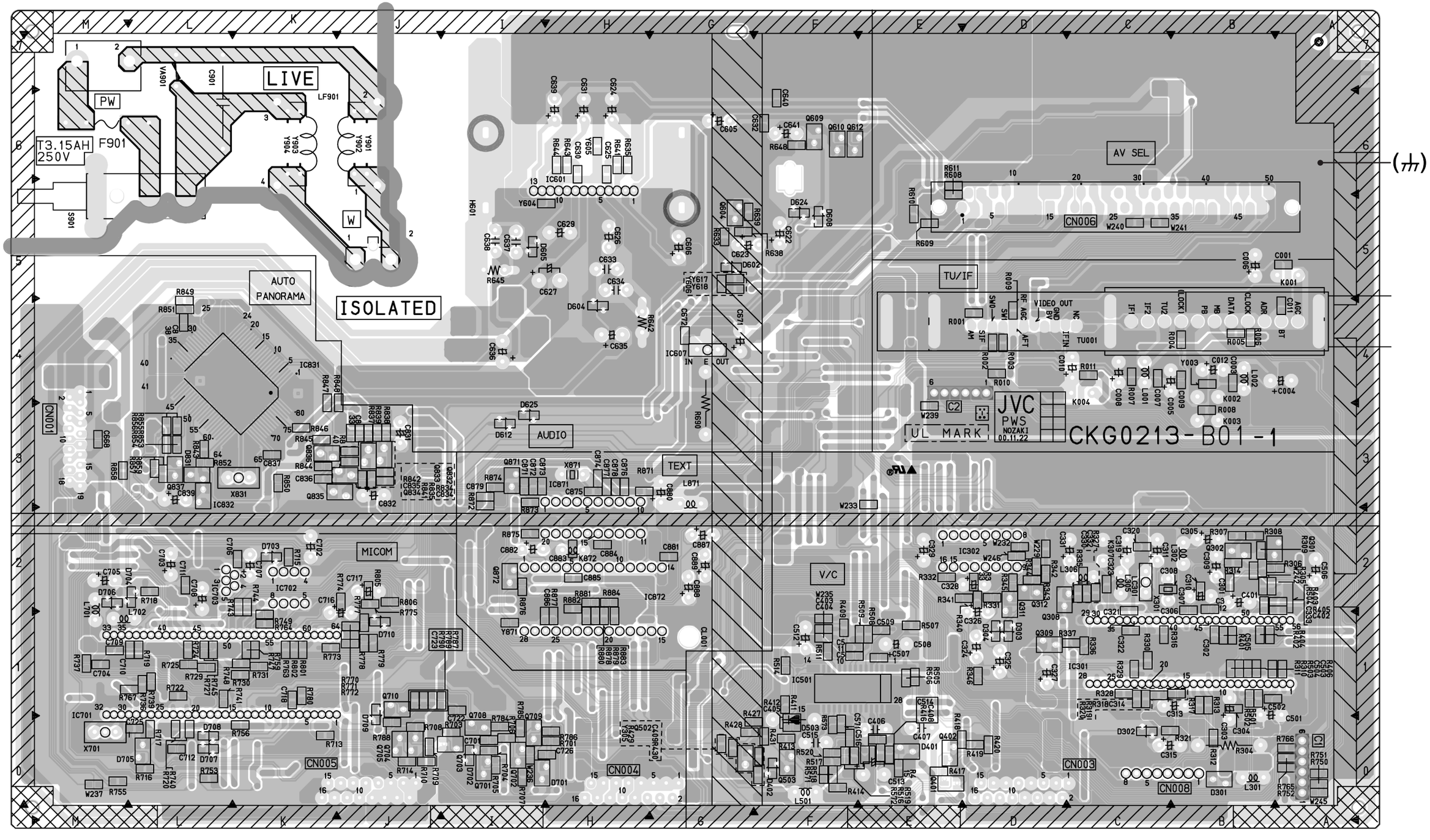

AV28WT5EPS AV24WT5EPS
AV28WT5EIS AV24WT5EIS
AV28WT5EKS AV24WT5EKS

POWER & DEF PWB PATTERN

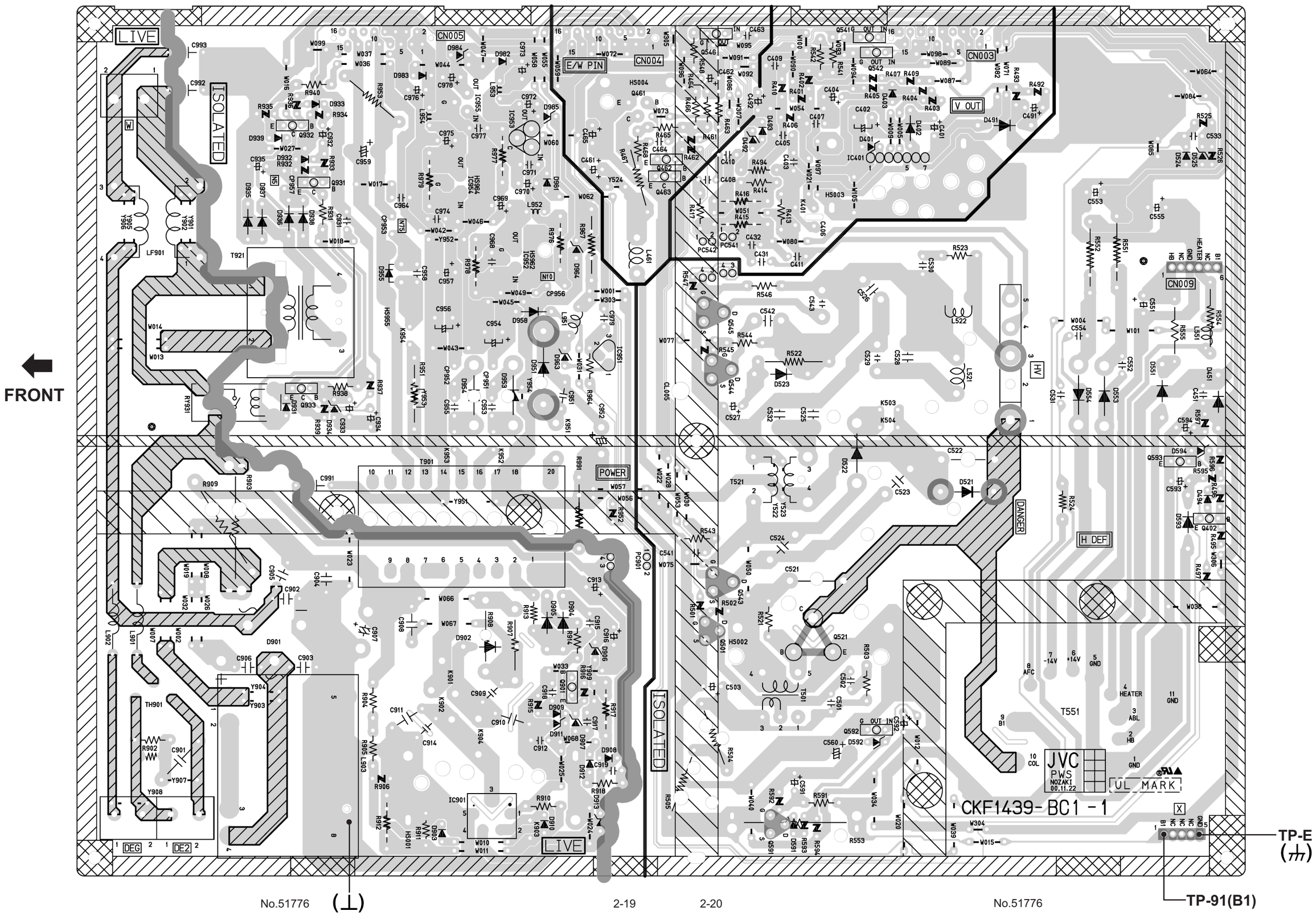

AV28WT5EPS AV24WT5EPS
AV28WT5EIS AV24WT5EIS
AV28WT5EKS AV24WT5EKS

AV SEL. PWB PATTERN

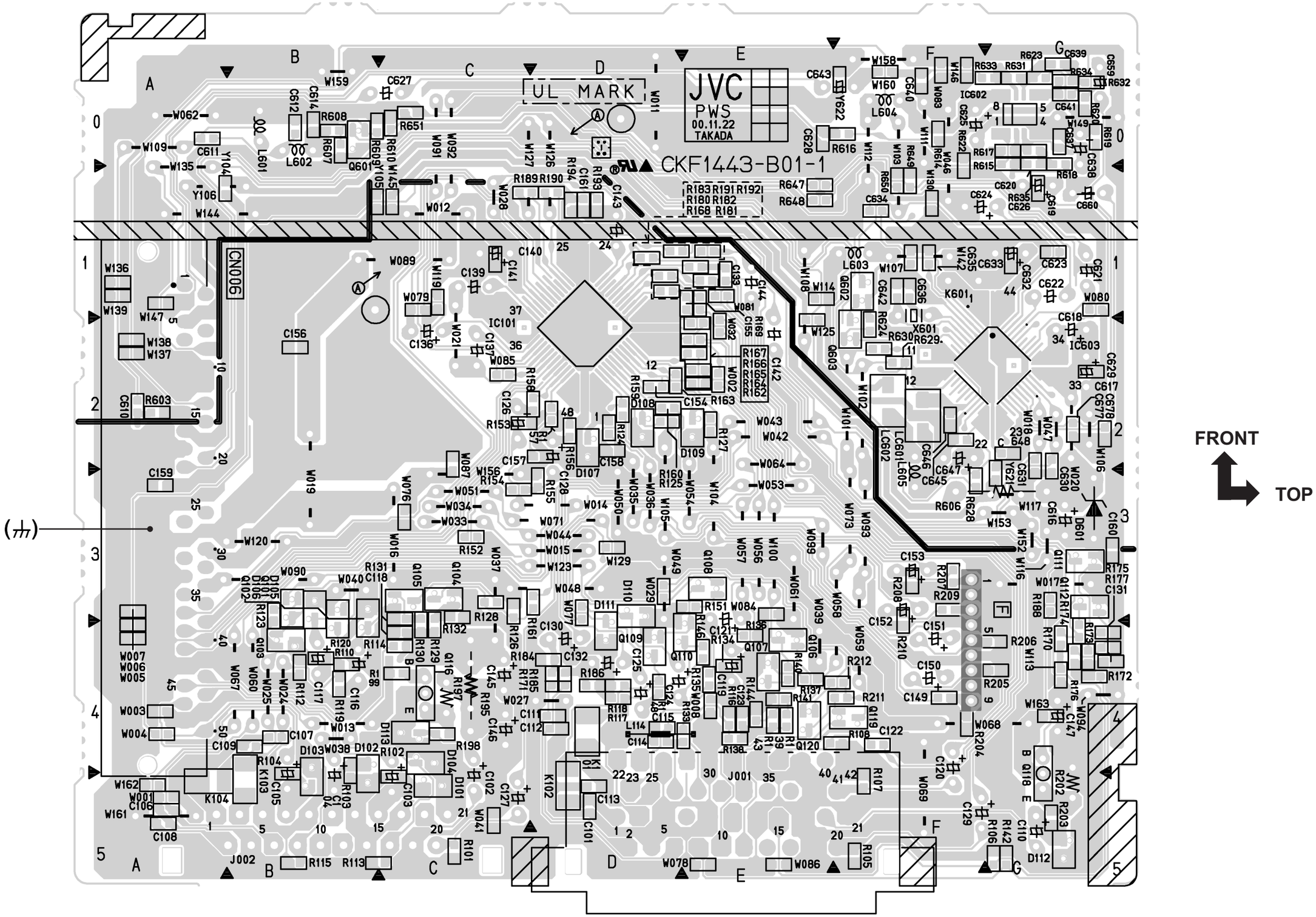

AV28WT5EPS AV24WT5EPS
AV28WT5EIS AV24WT5EIS
AV28WT5EKS AV24WT5EKS

CRT SOCKET PWB PATTERN

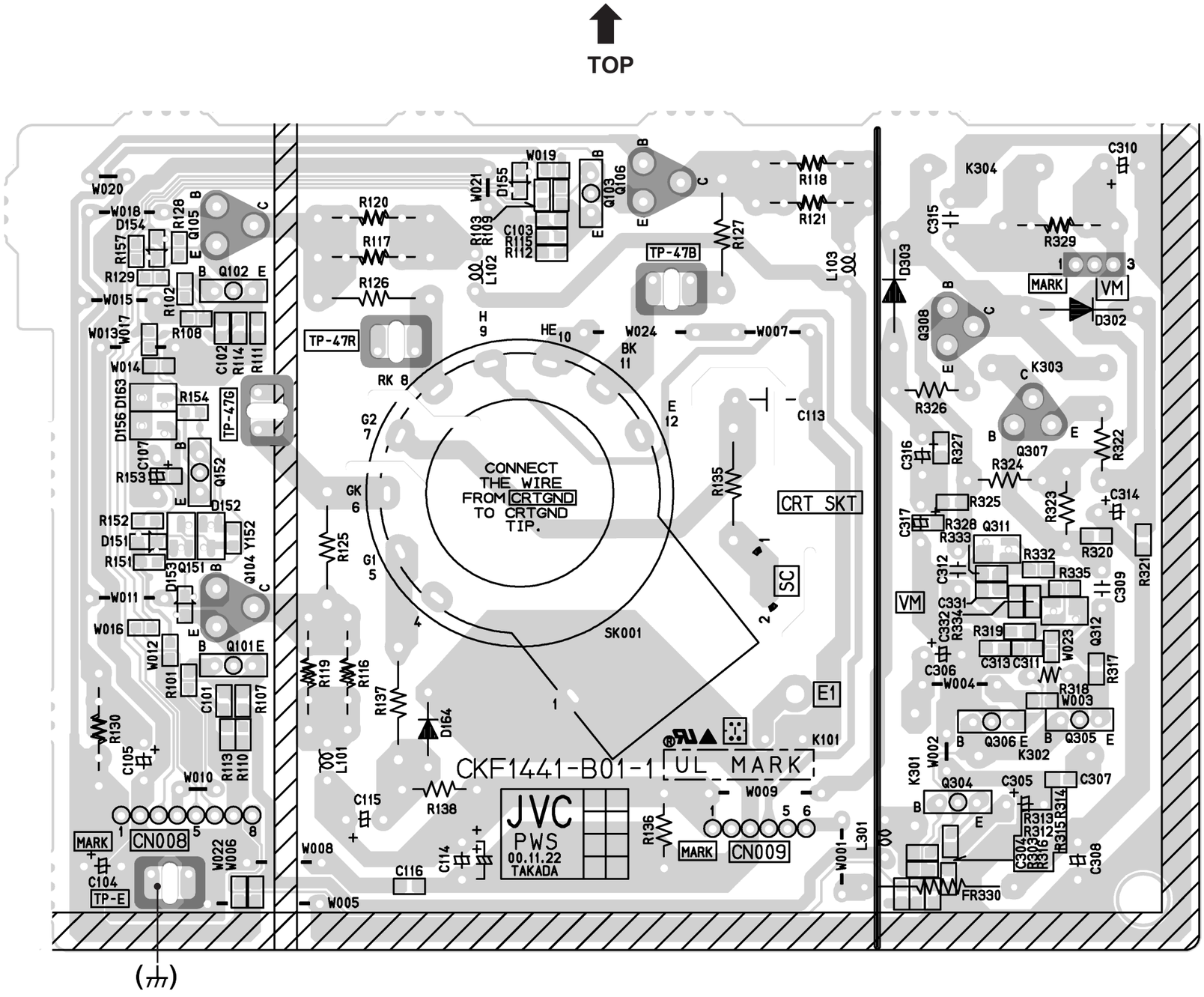

AV28WT5EPS AV24WT5EPS
AV28WT5EIS AV24WT5EIS
AV28WT5EKS AV24WT5EKS

FRONT CONTROL PWB PATTERN **[AV28WT5EPS / EIS / EKS]**

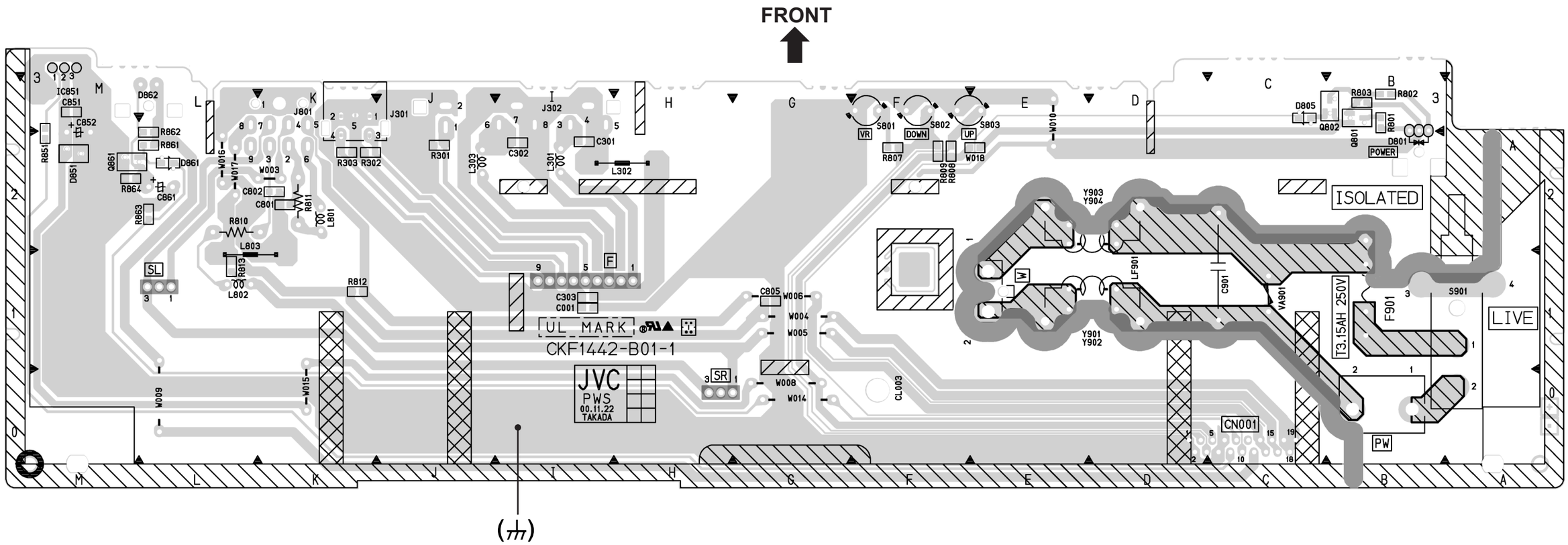

FRONT CONTROL PWB PATTERN **[AV24WT5EPS / EIS / EKS]**

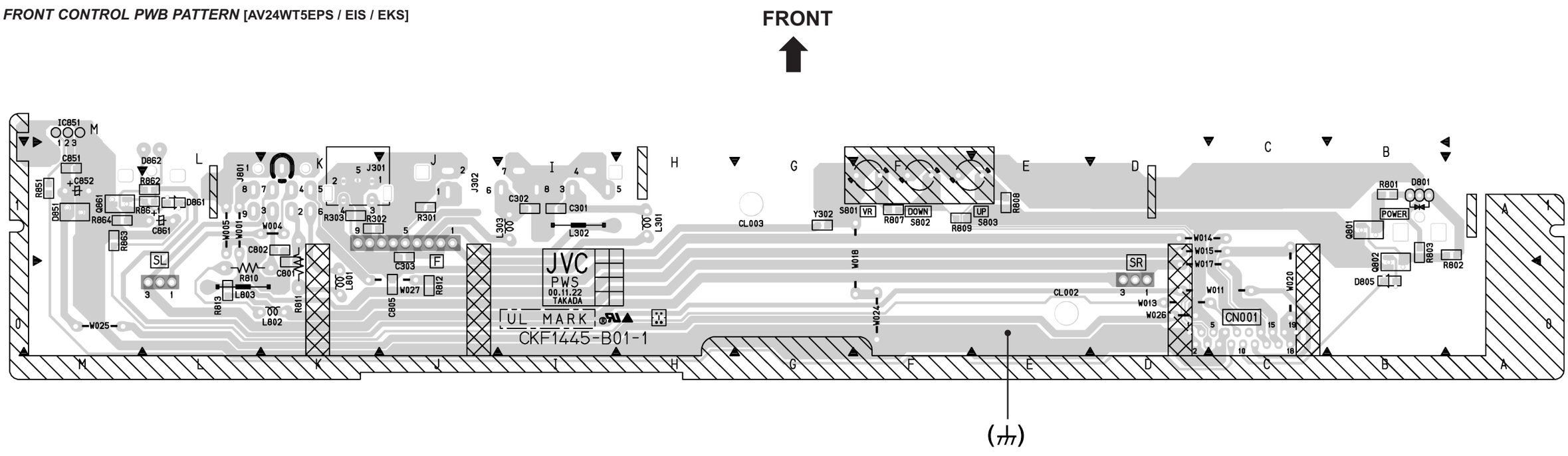

VP0101
DP2051